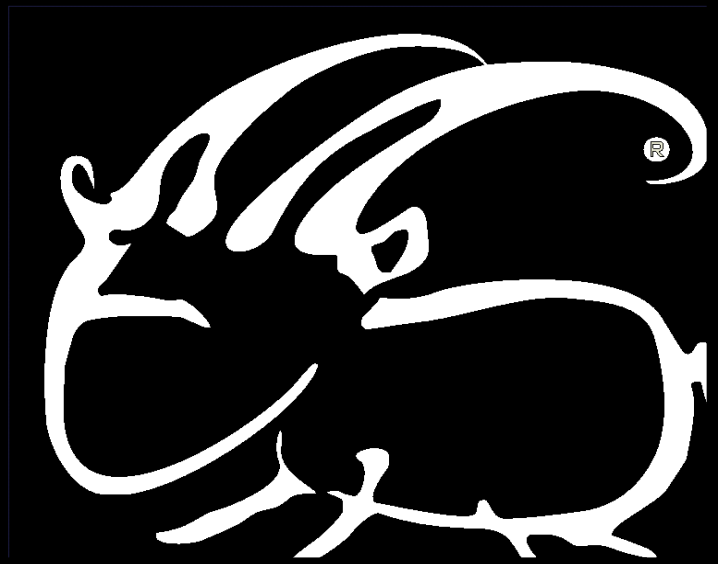

LabC04 Instruction Manual rel. 1.2 (01/2023)

Capricorn RC

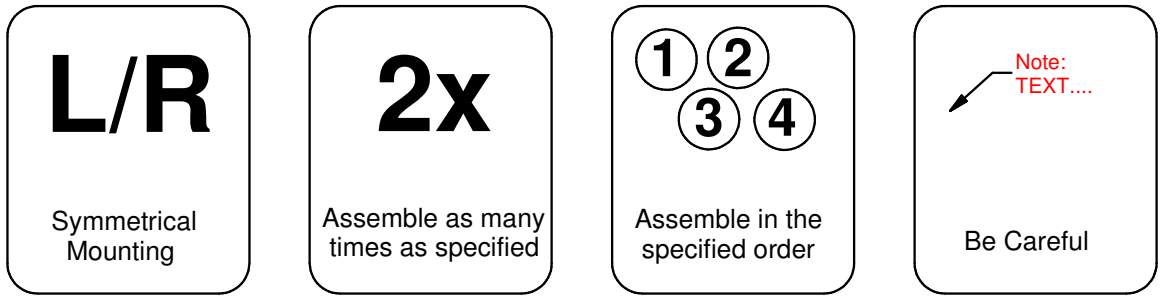

WARNING

This radio control model is not toy.
First time builders should seek the advice of experienced modellers before beginning assembly and/or if they do not fully understand any part of the construction.We highly advise to read the instruction manual before assembly, and to always keep it at hand for reference. Take care before operating this model; you are responsible for its assembly and safe operation. The extreme performance of this model could be understimated by inexpert drivers and could damage objects and/or people. Assembly this kit only in places out of children's reach!
CAPRICORN RC is not responsible for any damage or harm caused by improper use or assembly.
CAPRICORN RC and its distribution network are not responsible for any damage caused by shipping or handling.
Eventual parts missing from the kit or flawed must be reported within two weeks of purchase to your local hobby shop or distributor. For best performance, we highly advise to only use original authentic CAPRICORN RC parts.
For customer support and service please contact your local hobby shop or agent from whom you purchased this item.
Contents of box may slightly differ from the pictures shown. Construction tools, body, fuel, radio system and servo, engine, muffler and battery pack are NOT INCLUDED unless otherwise stated.

Made in Italy

Capricorn RC

Tools needed for assembly (NOT INCLUDED)


Hex Wrench
1,5/2/2,5/3mm


Box Wrench
7mm

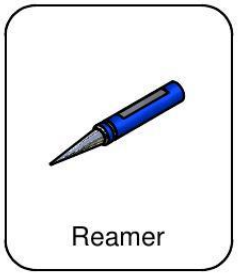
Reamer


Wrench Glowplug
& Cluthnut

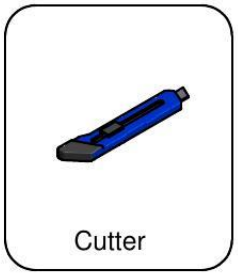
Cutter

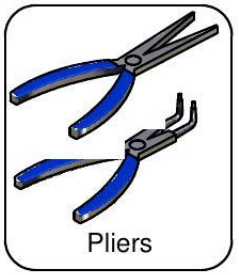
Pliers


Adjustable Pliers


Glass or Vinyl
Tape

Parts for model completion and Start (NOT INCLUDED)


Engine


Air Filter & Oil


Exhaust System

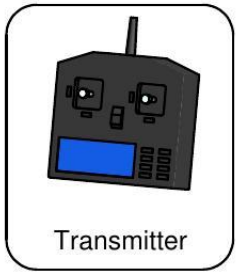
Transmitter

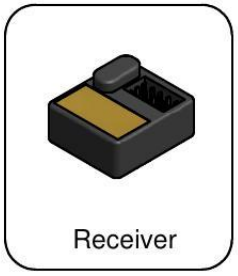
Receiver


Steering & Throttle
Low Profile Servos


RX Battery Pack

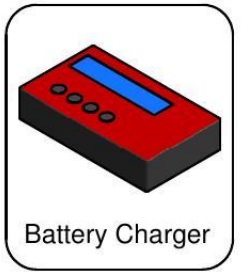
Battery Charger

Also required: Starting Box - Nitro fuel - Fuel bottle - Glower - Plycarbonat body

Made in Italy

Step 1.0

- Shock Damper -
BAG 1

Capricorn RC

4x

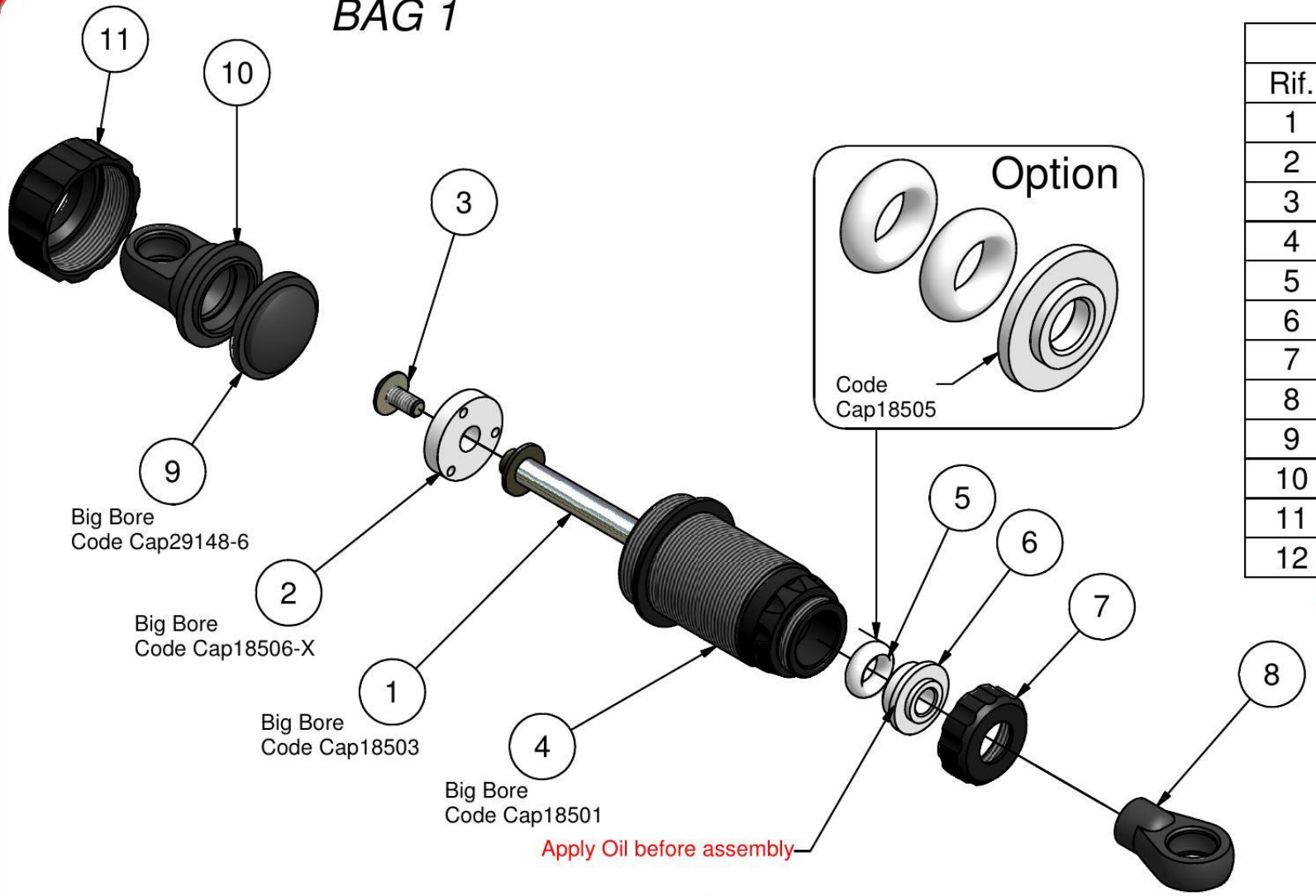

Parts List		
Rif.	n°	Code
1	1	Cap18510-L
2	1	Cap18509-X
3	1	Cap18507
4	1	Cap18508
5	1	Cap18512
6	1	Cap18504
7	1	Cap18502
8	1	Cap14042KS
9	1	Cap14033-6
10	1	Cap14036
11	1	Cap16085-B
12	1	Cap14030

Silicon Oil #600



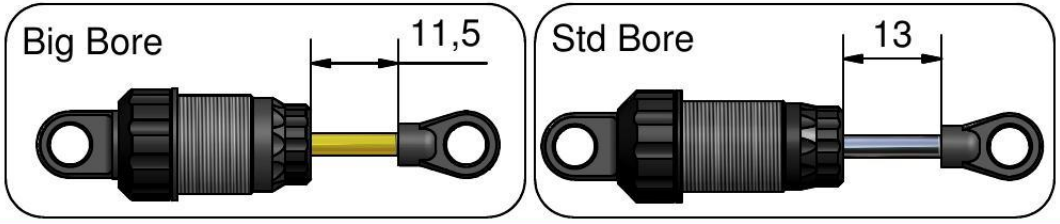

Made in Italy

Step 1.1

- Shock Damper -
BAG 1

Capricorn RC

4x

Parts List		
Rif.	n°	Code
1	1	Cap171215
2	1	Cap16027
3	1	Cap16098F
4	1	Cap14030
5	2	Cap18169

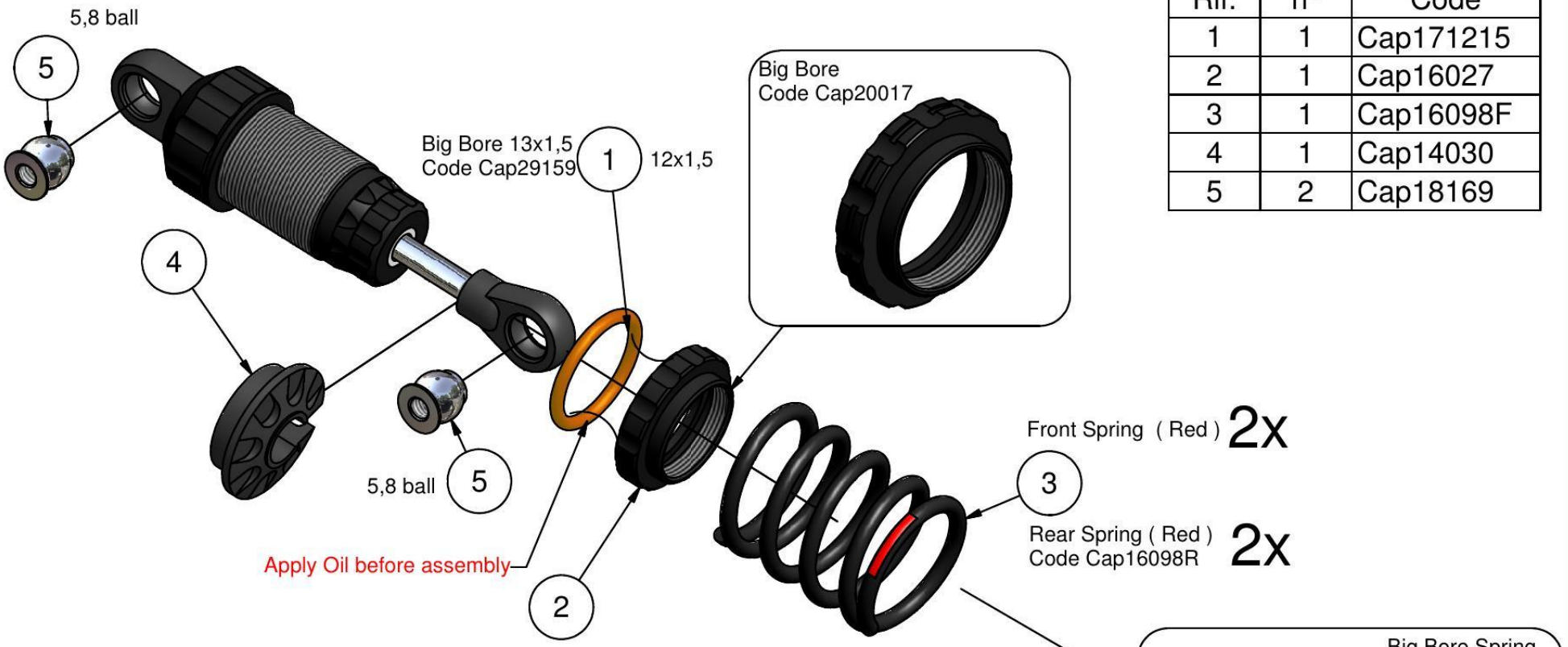

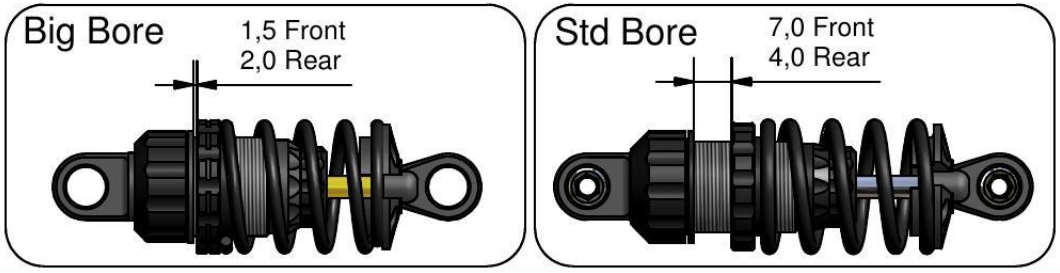

Made in Italy

Step 2.0

- Servo Saver - BAG 2

Capricorn RC

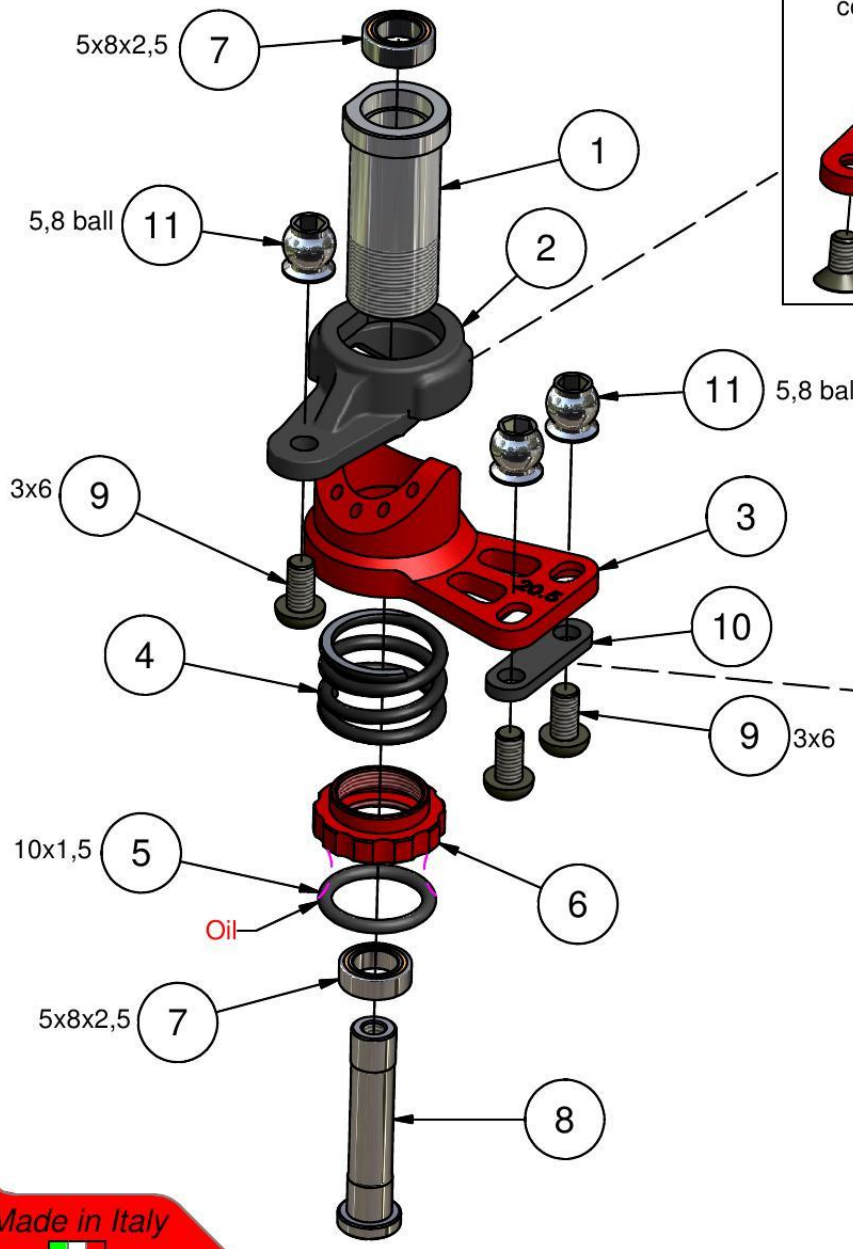

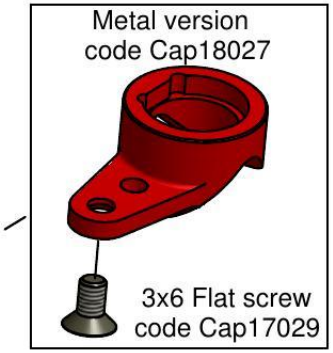



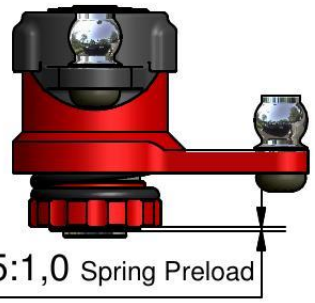

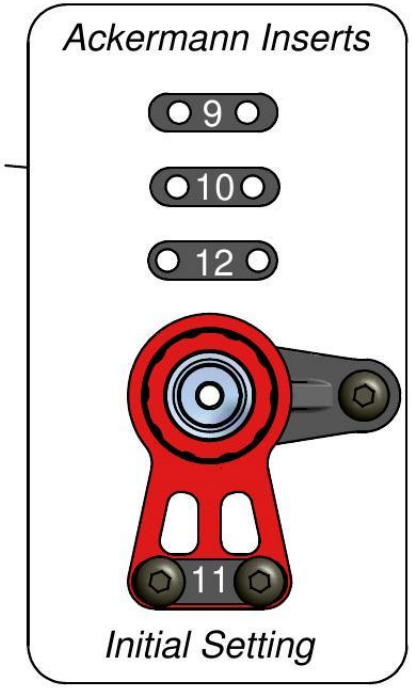

Parts List		
Rif.	n°	Code
1	1	Cap16014
2	1	Cap18093
3	1	Cap18205
4	1	Cap16033
5	1	Cap171015
6	1	Cap16028
7	2	Cap16019
8	1	Cap16055
9	3	Cap17030
10	1	Cap15005P
11	3	Cap18169

Made in Italy

Capricorn RC

- Belt Tensioner Set - BAG 3

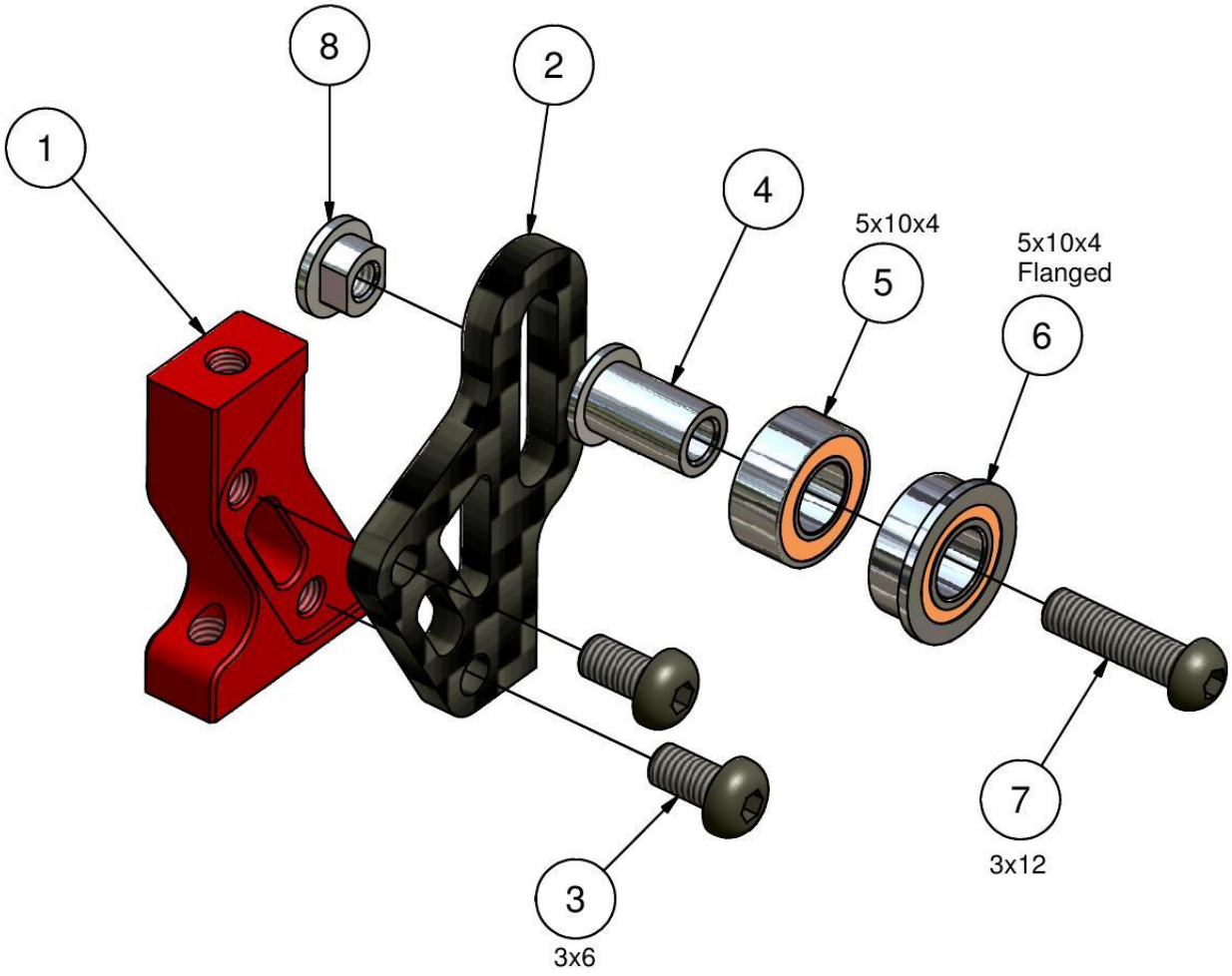

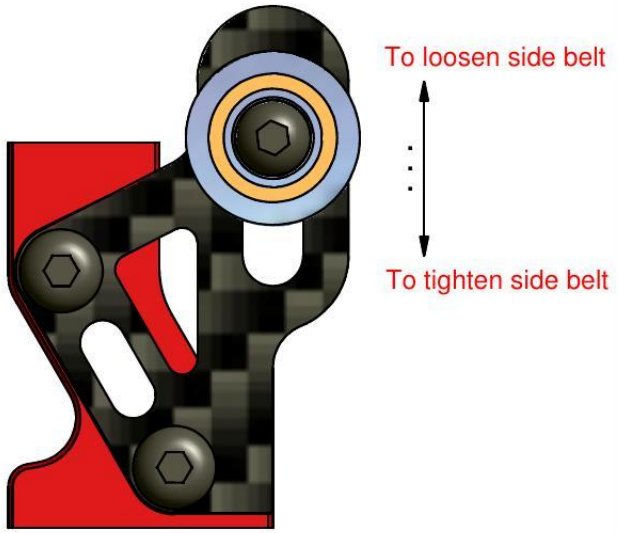

Parts List		
Rif.	n°	Code
1	1	Cap18195
2	1	Cap18196
3	2	Cap17030
4	1	Cap16012
5	1	Cap 415
6	1	Cap16018
7	1	Cap17026
8	1	Cap15010

Step 4.0

Capricorn RC

- Middle Shaft Holder -
BAG 4

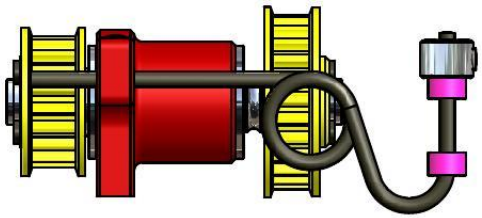

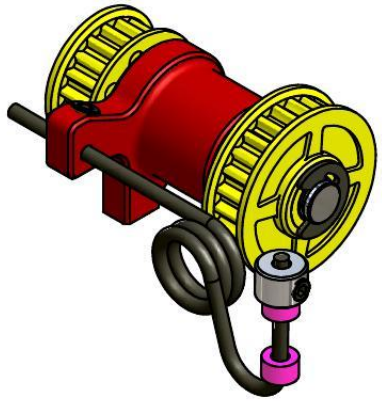

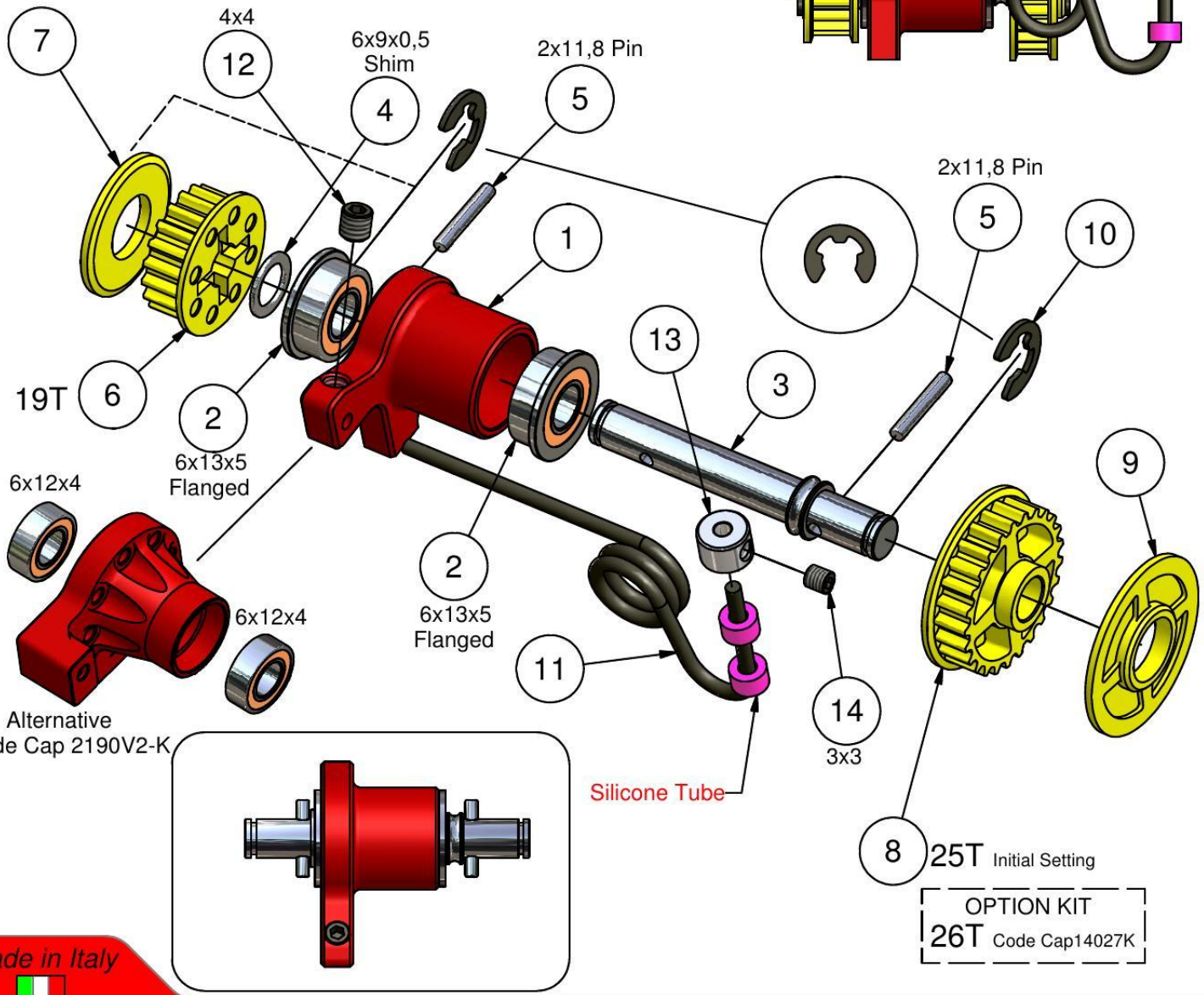

Parts List		
Rif.	n°	Code
1	1	Cap18189
2	2	Cap18206
3	1	Cap18071
4	1	Cap18080
5	2	Cap17016
6	1	Cap14024K
7	1	Cap14024K
8	1	Cap14026K
9	1	Cap14026K
10	2	Cap17002
11	1	Cap 506XL
12	1	Cap17010
13	1	Cap16015
14	1	Cap17006

Made in Italy

- 2 Speed gear -
BAG 5



Note:
To be smooth as indicated
for soft change gear adjustment

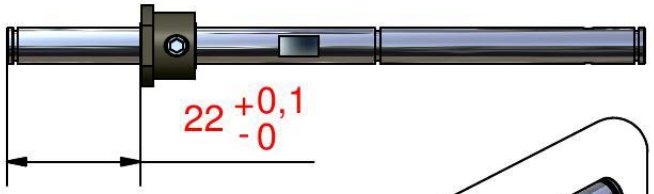

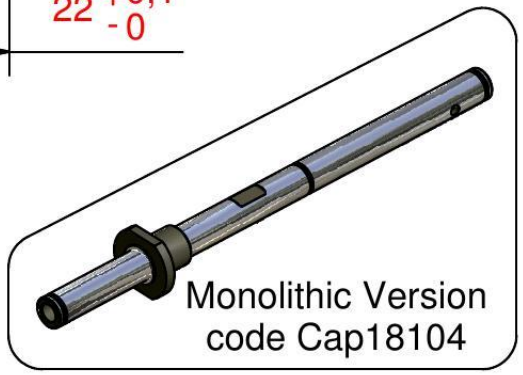

Note:
Adjust the 2,5x10 screws in equal mode

Parts List		
Rif.	n°	Code
1	1	Cap18118
2	1	Cap14017
3	6	Cap17038
4	1	Cap14020
5	1	Cap18110
6	1	Cap16001
7	1	Cap16074
8	1	Cap17009
9	2	Cap16062
10	2	Cap14032
11	2	Cap16011
12	2	Cap16031
13	2	Cap17021
14	2	Cap16079
15	1	Cap17002

Made in Italy

Step 6.0

- Rear Hub - BAG 6

Capricorn RC

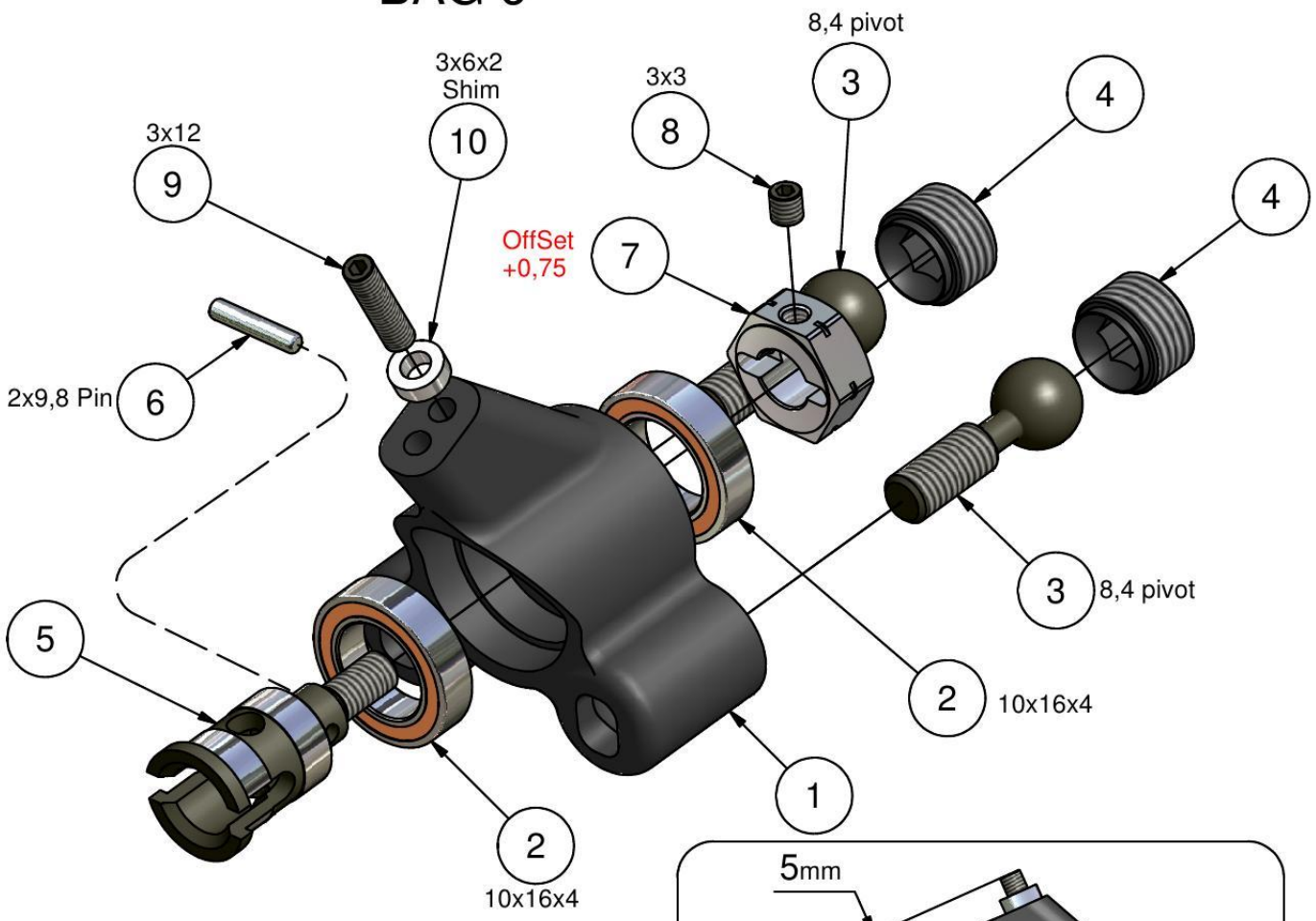



2x L/R

Parts List		
Rif.	n°	Code
1	1	Cap14004B
2	2	Cap16017
3	2	Cap16004S
4	2	Cap16026S
5	1	Cap16097
6	1	Cap17015
7	1	Cap 255+
8	1	Cap17006
9	1	Cap17005
10	1	Cap22015

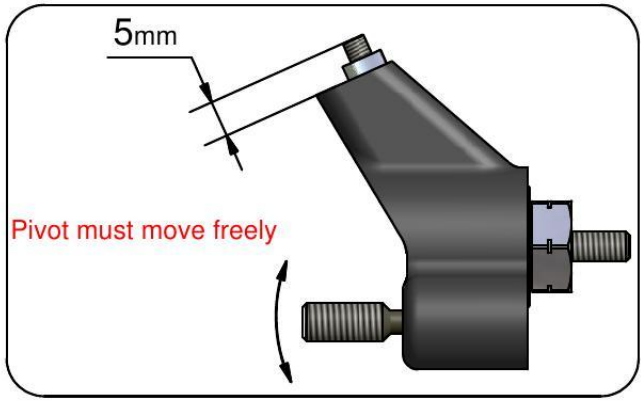

Made in Italy

Step 6.1

- Front Hub - BAG 6

Capricorn RC

Right Steering Block

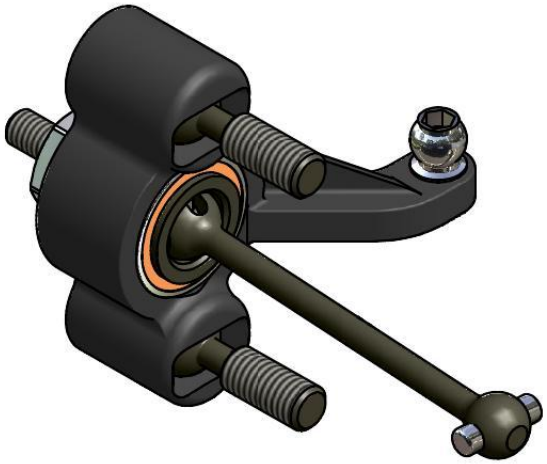

2x L/R

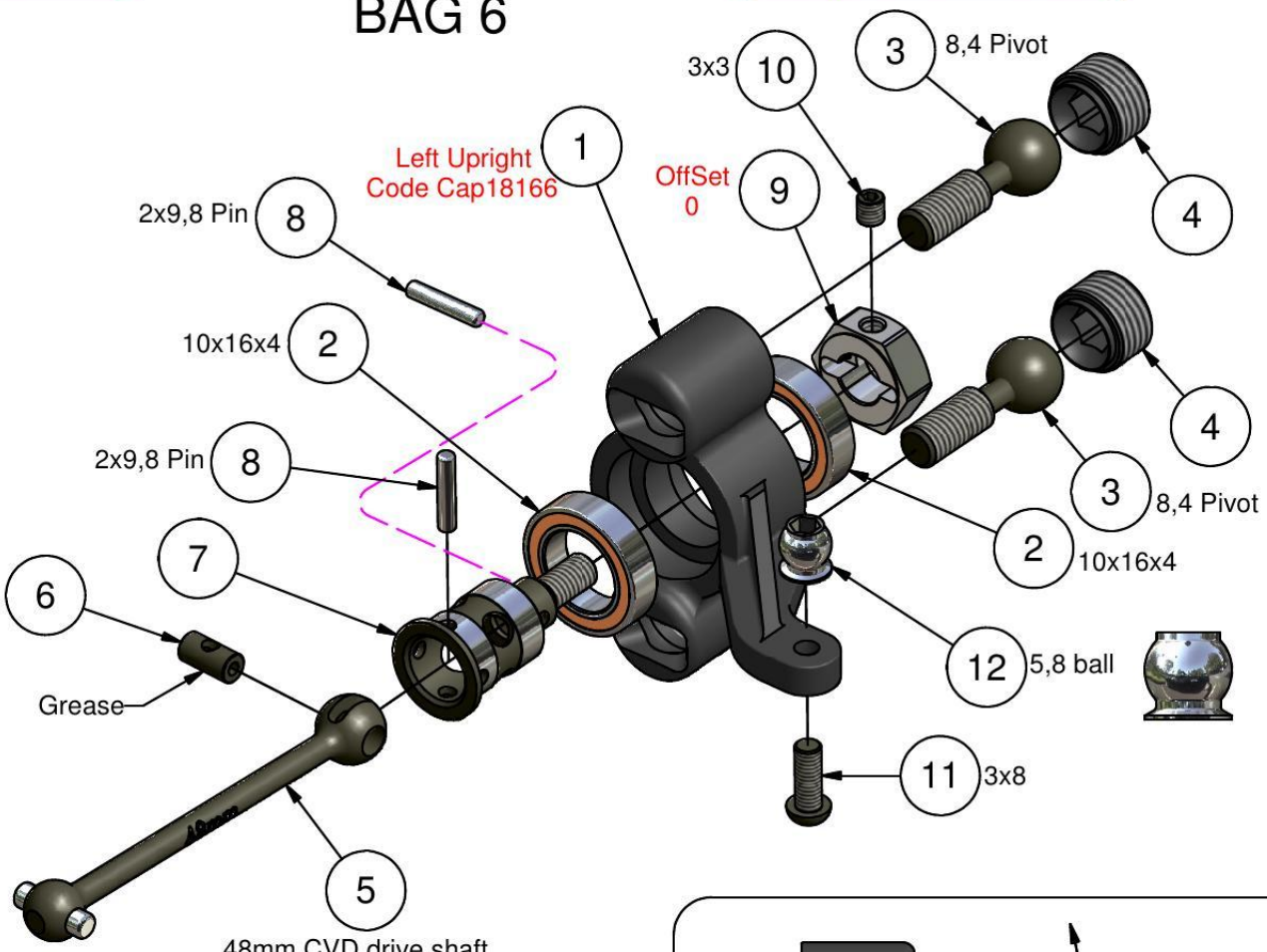

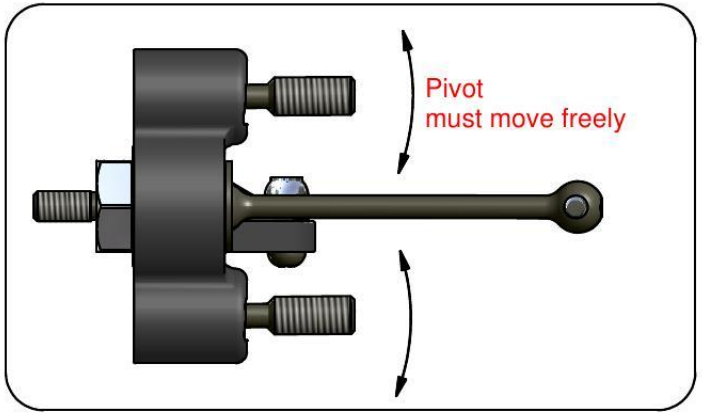

Parts List		
Rif.	n°	Code
1	1	Cap18165
2	2	Cap16017
3	2	Cap16004S
4	2	Cap16026S
5	1	Cap18200
6	1	Cap16092
7	1	Cap16096
8	2	Cap17015
9	1	Cap 255
10	1	Cap17006
11	1	Cap17032
12	1	Cap18169

Made in Italy

Step 7.0

- Brake Set - BAG 7

Capricorn RC

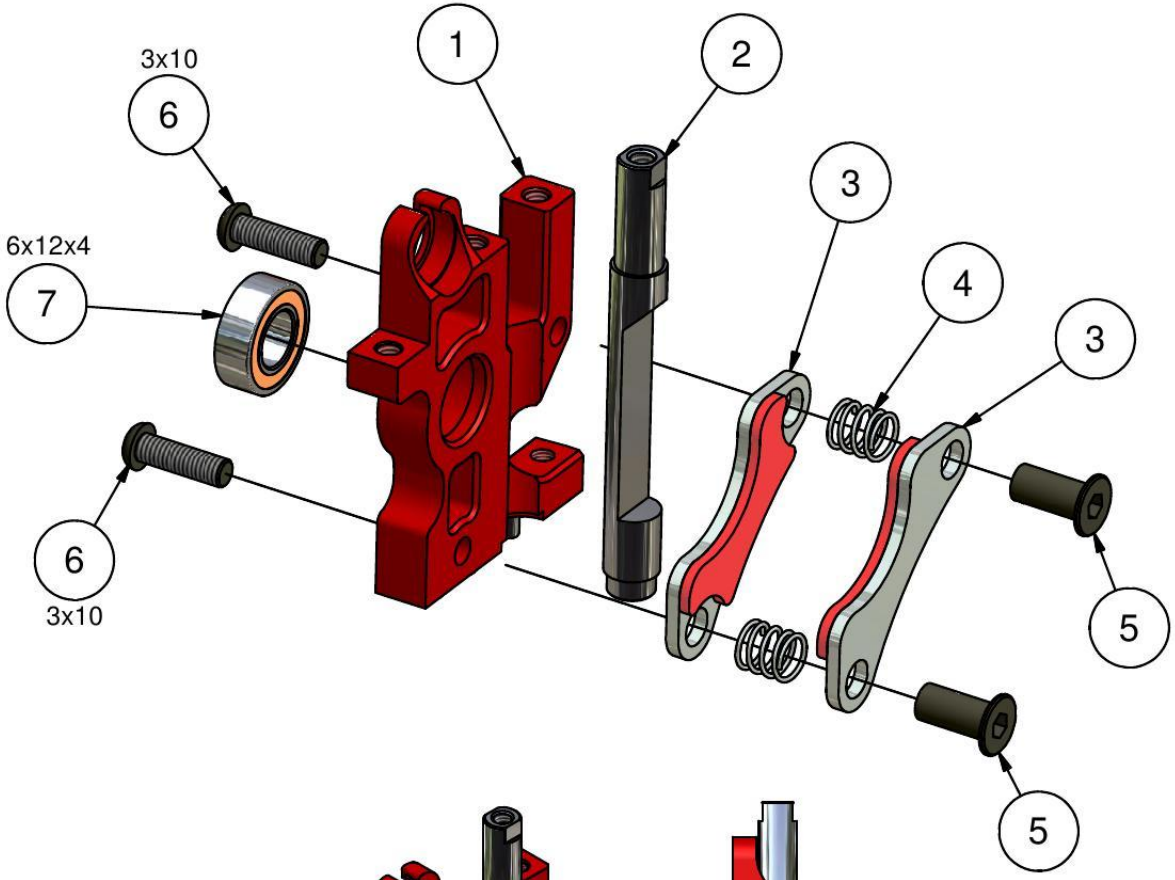



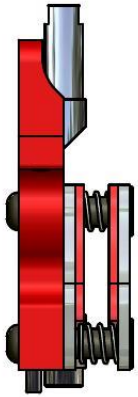

Note:
Ensure that the brake system move freely

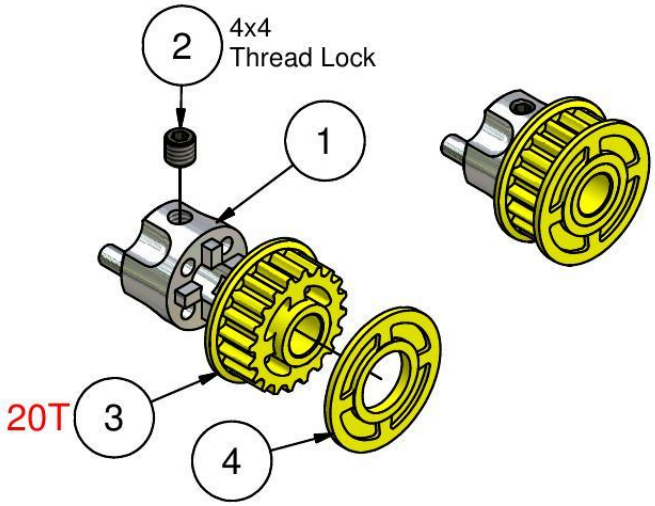

Parts List		
Rif.	n°	Code
1	1	Cap16077B
2	1	Cap17010
3	1	Cap14025K
4	1	Cap14025K

Parts List		
Rif.	n°	Code
1	1	Cap18187
2	1	Cap16013-V2
3	2	Cap18066-TF
4	2	Cap 2070
5	2	Cap18069
6	2	Cap17023
7	1	Cap16021

Made in Italy

Step 8.0 - Front Bodymounts - BAG 8

Capricorn RC

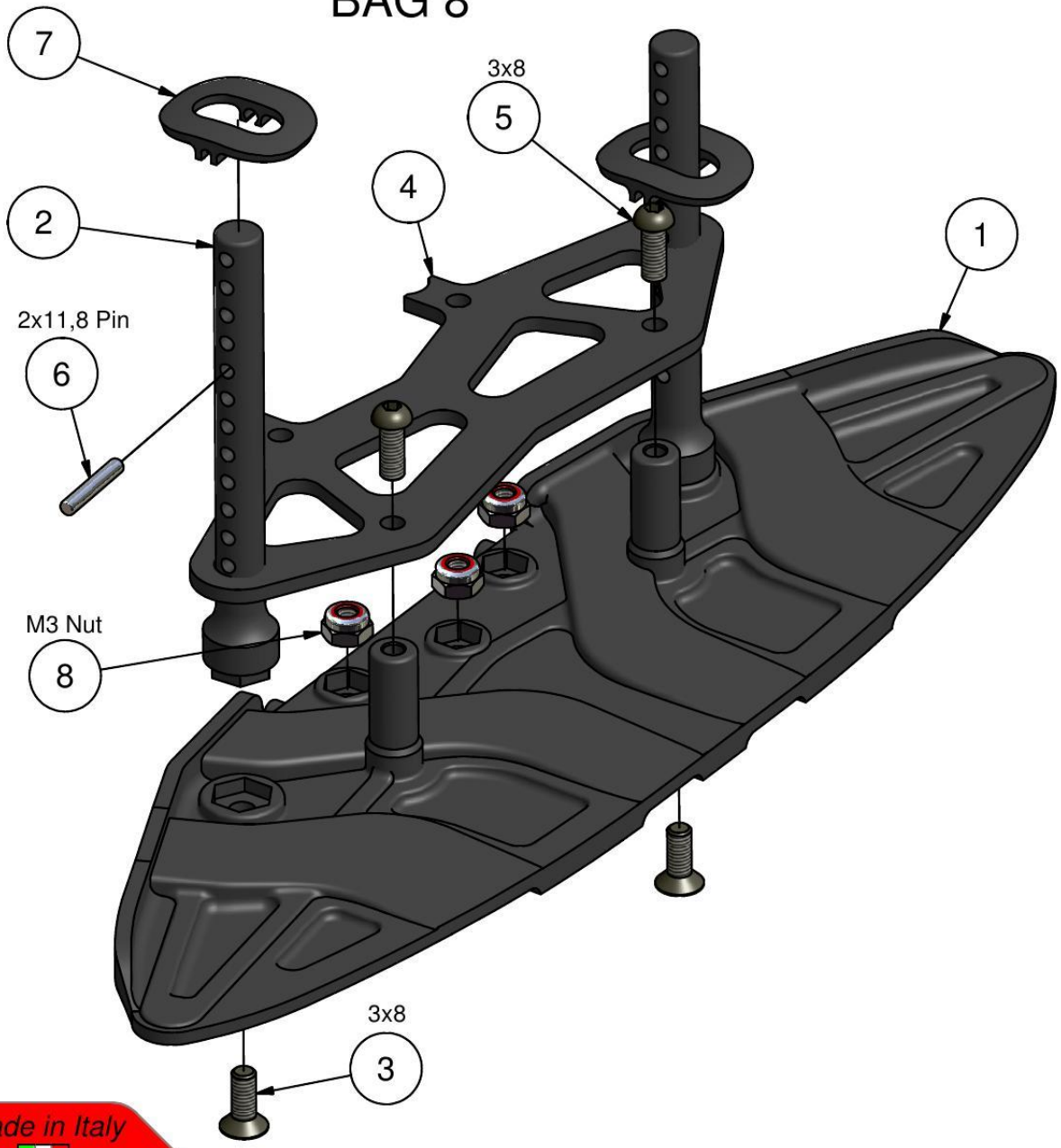

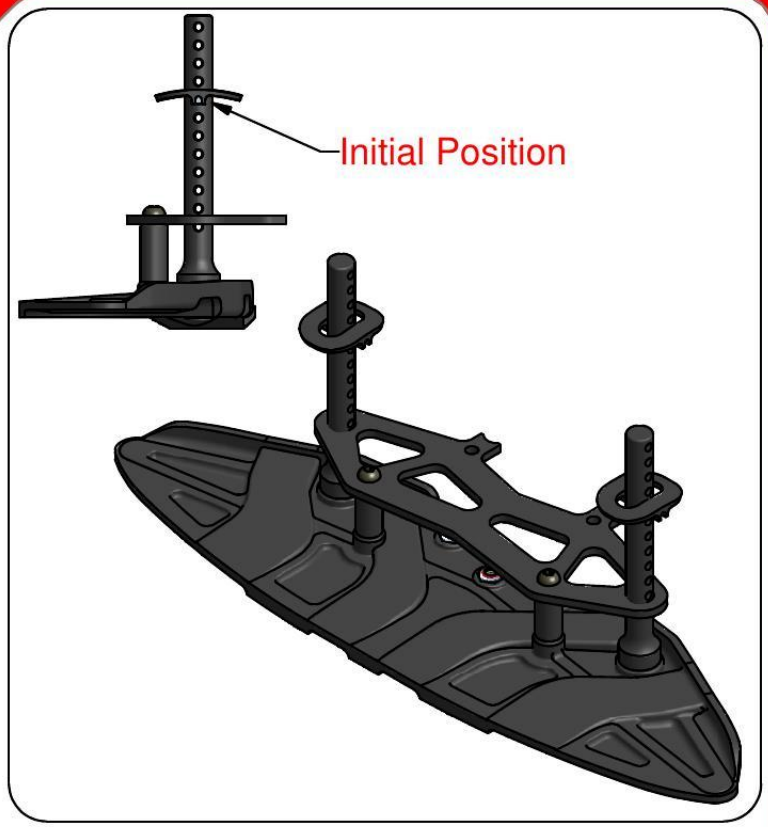

Parts List		
Rif.	n°	Code
1	1	Cap18083
2	2	Cap15011
3	2	Cap17031
4	1	Cap15007P
5	2	Cap17032
6	2	Cap17016
7	2	Cap15013
8	3	Cap17040

Made in Italy

Step 9.0 - Rear Anti-Roll Bar - BAG 9

Capricorn RC

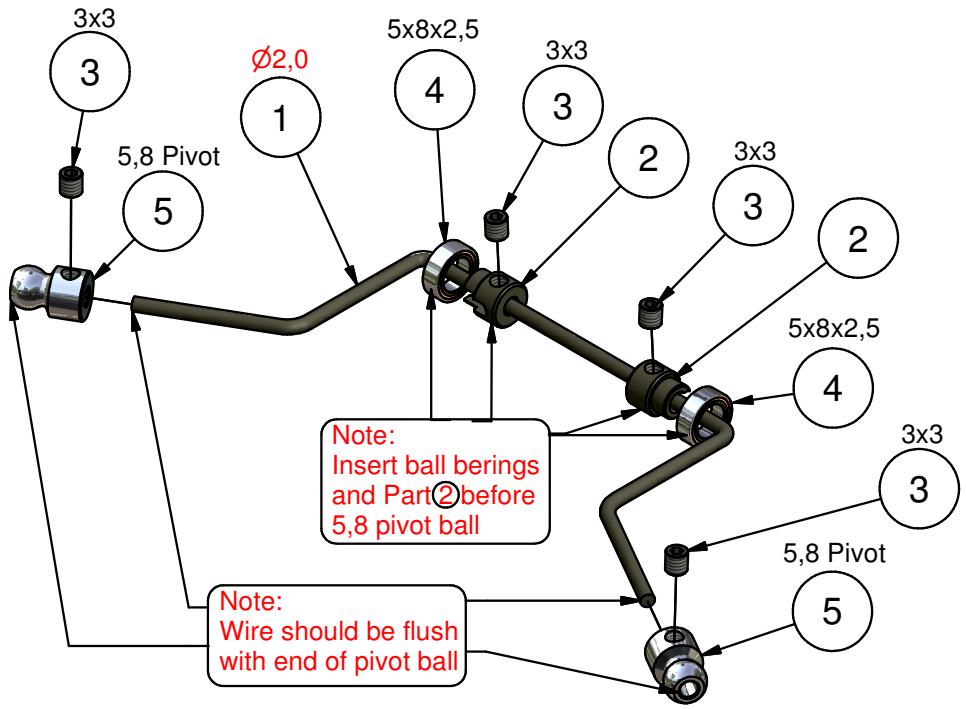

Parts List		
Rif.	n°	Code
1	1	Cap16008-2.0
2	2	Cap18070-2.0
3	4	Cap17006
4	2	Cap16019
5	2	Cap16087

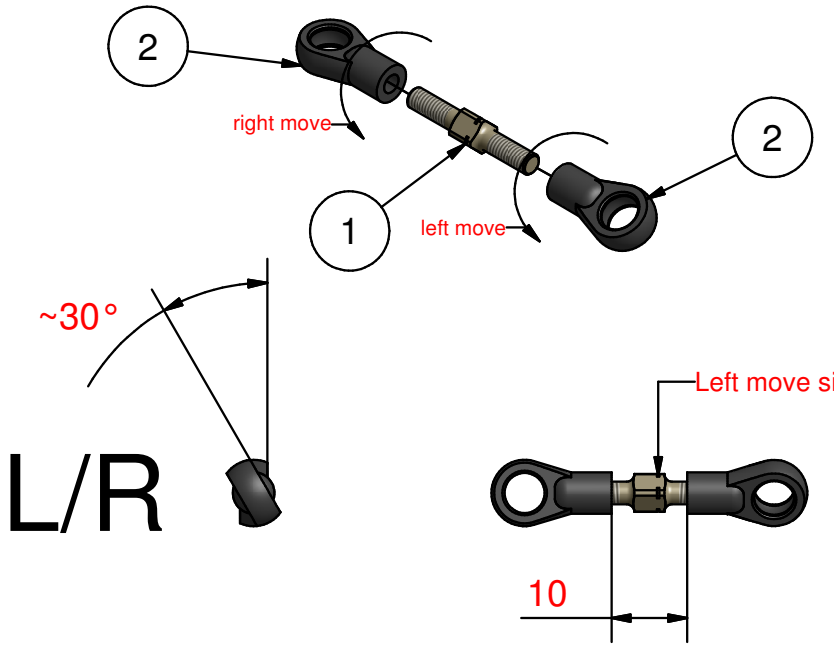

2x

Parts List		
Rif.	n°	Code
1	1	Cap 2152B
2	2	Cap14043KS

Made in Italy

Step 10.0 - Front gear differential - BAG 10

Capricorn RC

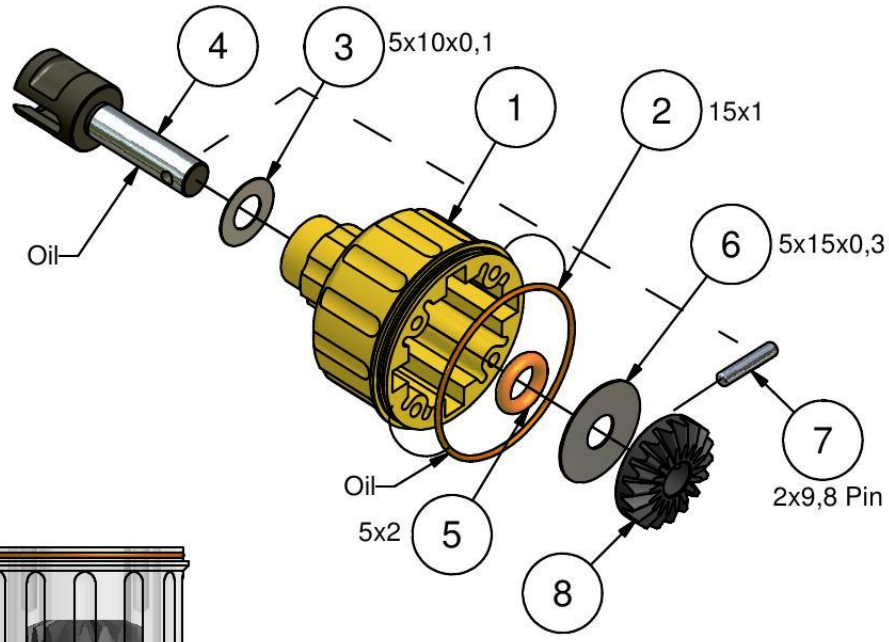

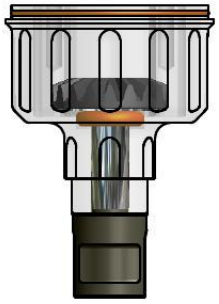

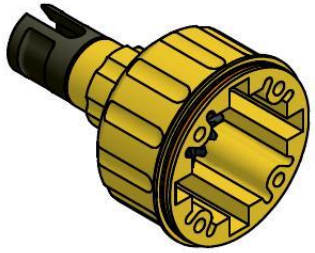

Parts List		
Rif.	n°	Code
1	1	Cap14014G
2	1	Cap172407K
3	1	Cap17042
4	1	Cap16075
5	1	Cap170520
6	1	Cap17042
7	1	Cap17015
8	1	Cap14045

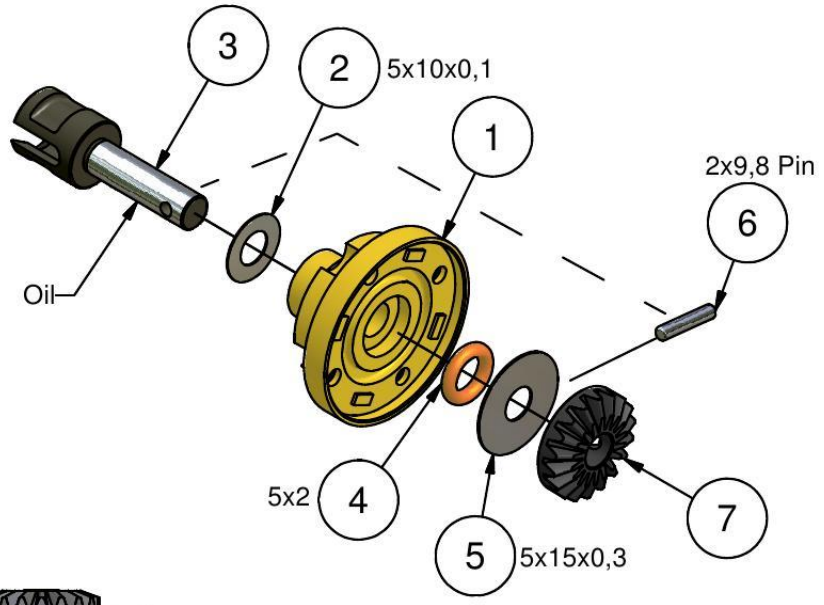

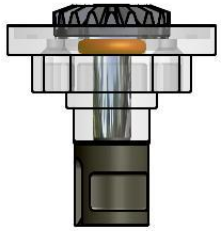



Parts List		
Rif.	n°	Code
1	1	Cap14014G
2	1	Cap17042
3	1	Cap16075
4	1	Cap170520
5	1	Cap17042
6	1	Cap17015
7	1	Cap14045

Made in Italy

Step 10.1 - Front gear differential - BAG 10

Capricorn RC

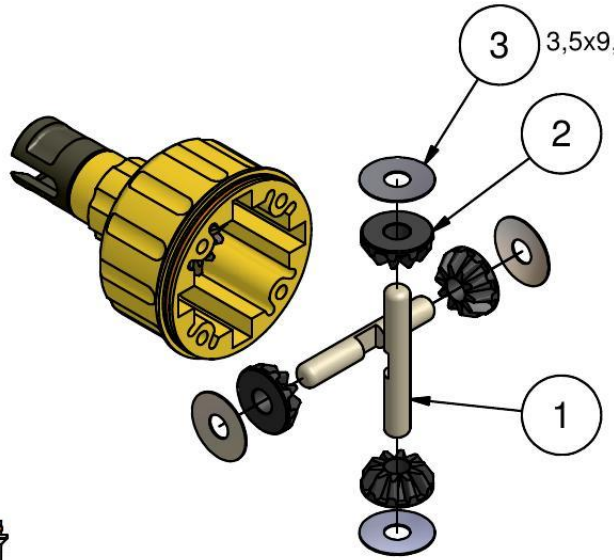

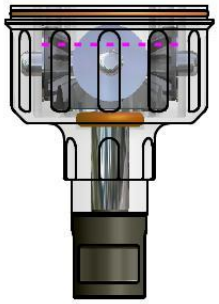

Note:
Fill differential up to the top of the pins with silicon oil.
Initial Setting 300.000



Parts List		
Rif.	n°	Code
1	2	Cap16056H
2	4	Cap14045
3	4	Cap17042

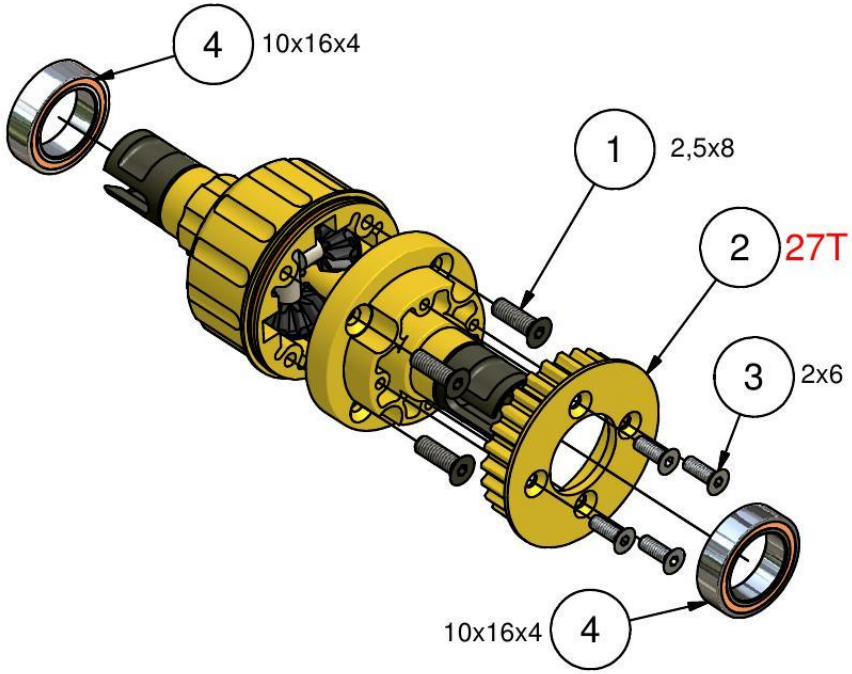

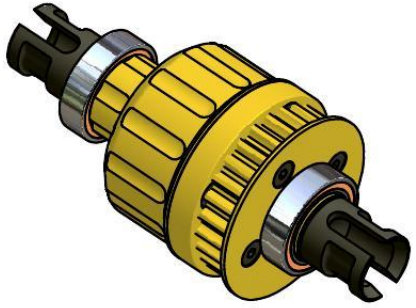

Parts List		
Rif.	n°	Code
1	4	Cap17022
2	1	Cap14028K
3	4	Cap17020
4	2	Cap16017

Made in Italy

Step 10.2 - Rear gear differential - BAG 10

Capricorn RC

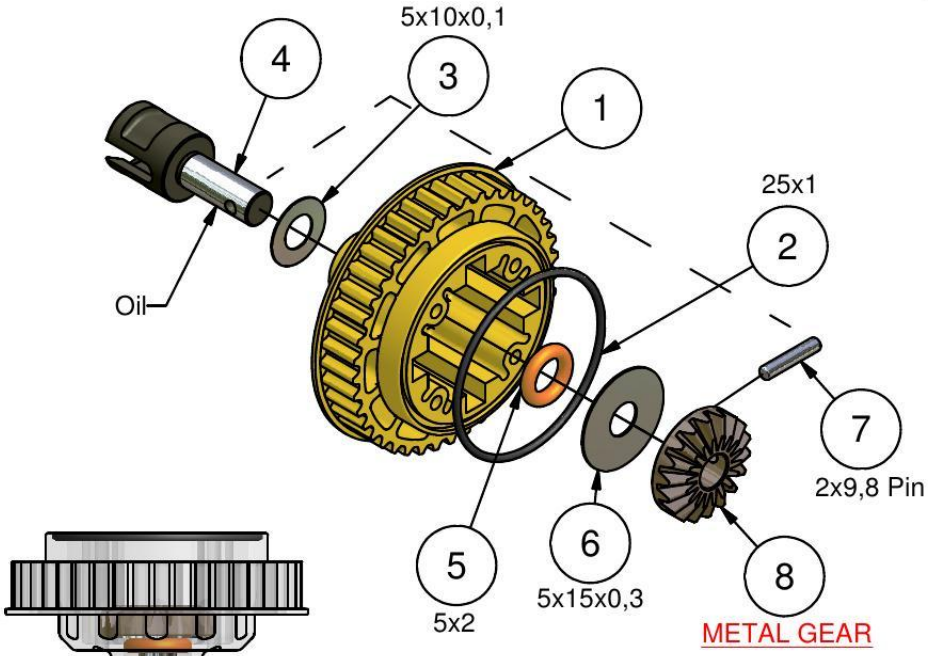

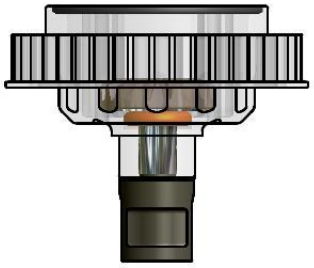



Parts List		
Rif.	n°	Code
1	1	Cap14021G-V3
2	1	Cap24005
3	1	Cap17042
4	1	Cap16076
5	1	Cap170520
6	1	Cap17042
7	1	Cap17015
8	1	Cap18155

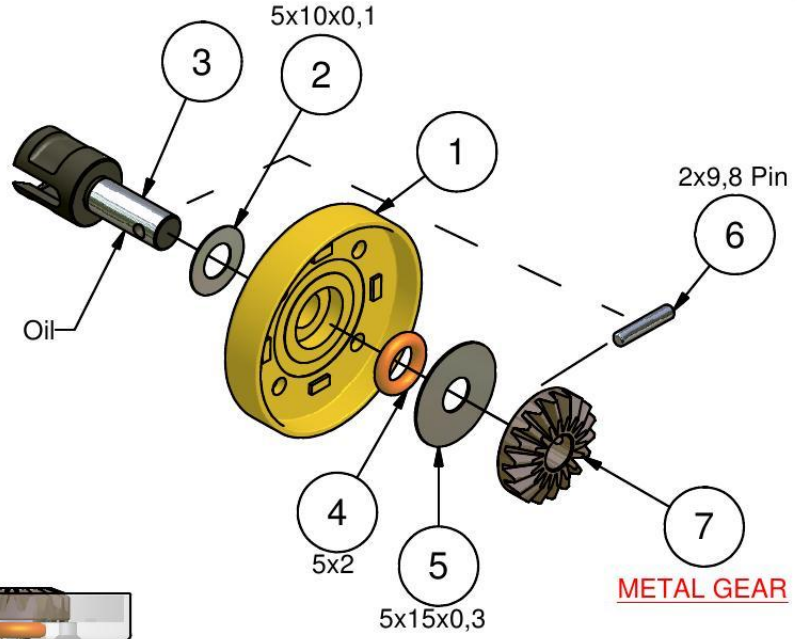

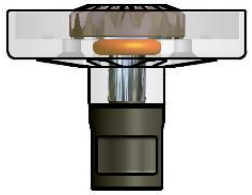

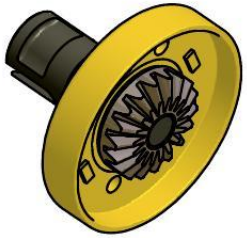

Parts List		
Rif.	n°	Code
1	1	Cap14021G-V3
2	1	Cap17042
3	1	Cap16076
4	1	Cap170520
5	1	Cap17042
6	1	Cap17015
7	1	Cap18155

Made in Italy

Step 10.3 - Rear gear differential - BAG 10

Capricorn RC

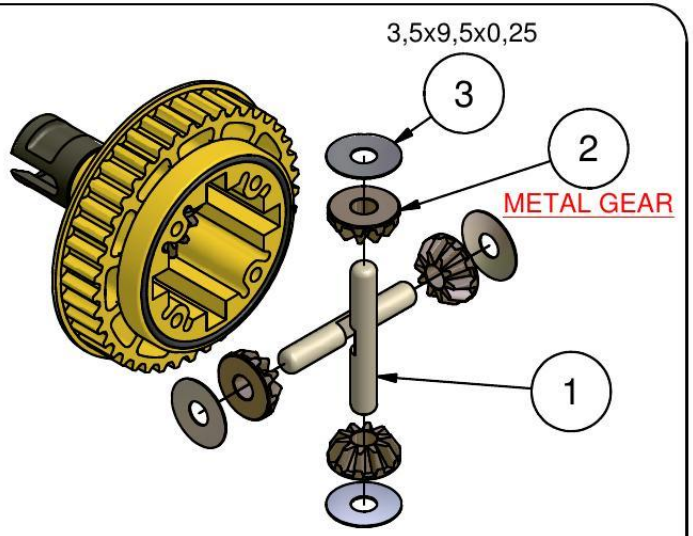

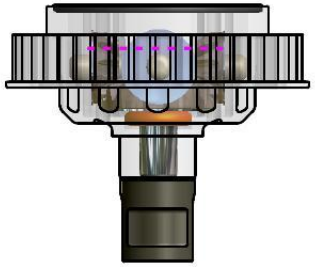

Note:
Fill differential up to the top of the pins with silicon oil.
Initial Setting 80.000



Parts List		
Rif.	n°	Code
1	2	Cap16056H
2	4	Cap18155
3	4	Cap17042

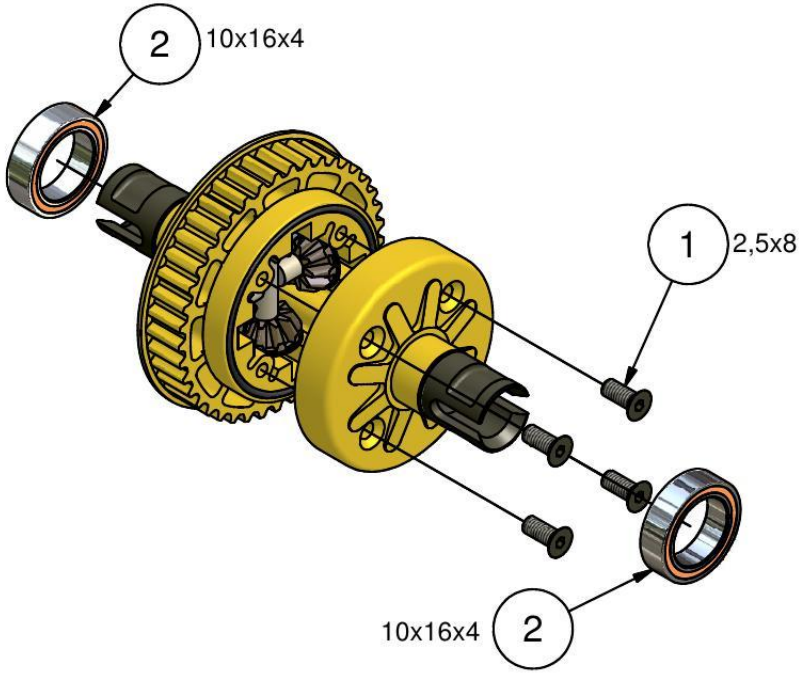



Parts List		
Rif.	n°	Code
1	4	Cap17035
2	2	Cap16017

Made in Italy

Capricorn RC

L/R

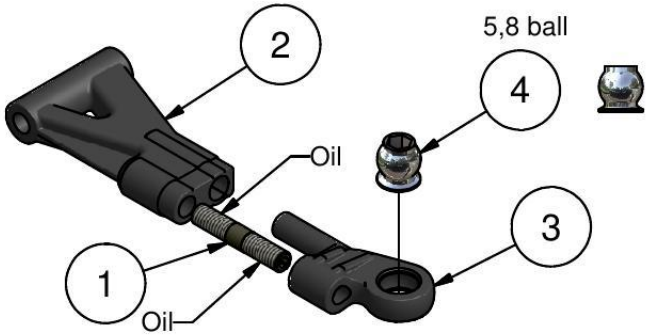

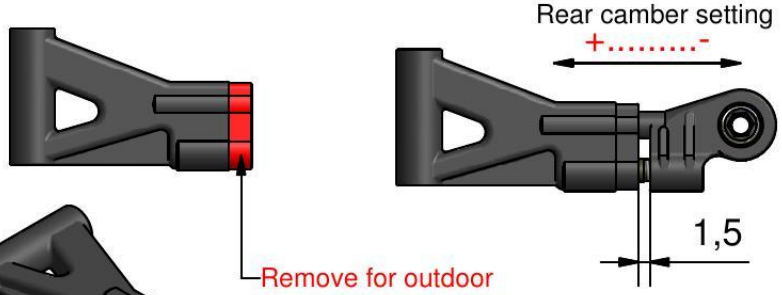



2x

Parts List		
Rif.	n°	Code
1	1	Cap 2115
2	1	Cap18114
3	1	Cap18115
4	1	Cap18169

L/R

Note:
Ensure move freely

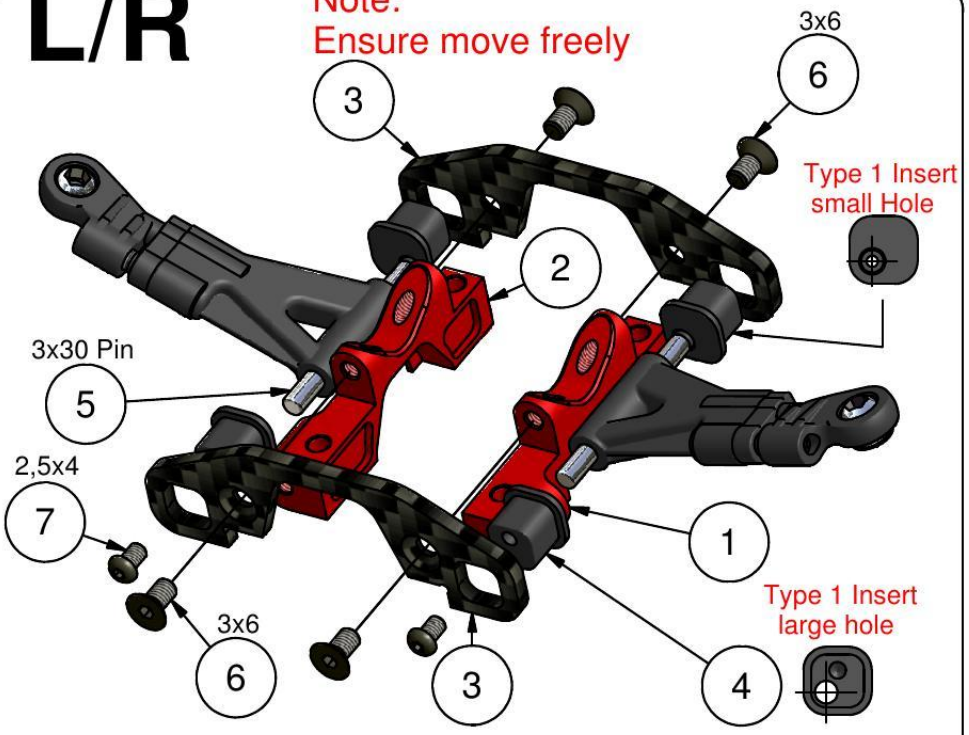





Parts List		
Rif.	n°	Code
1	1	Cap18176
2	1	Cap18177
3	2	Cap18179
4	4	Cap14038-Q
5	2	Cap18078
6	4	Cap17029
7	2	Cap18019

Made in Italy

L/R

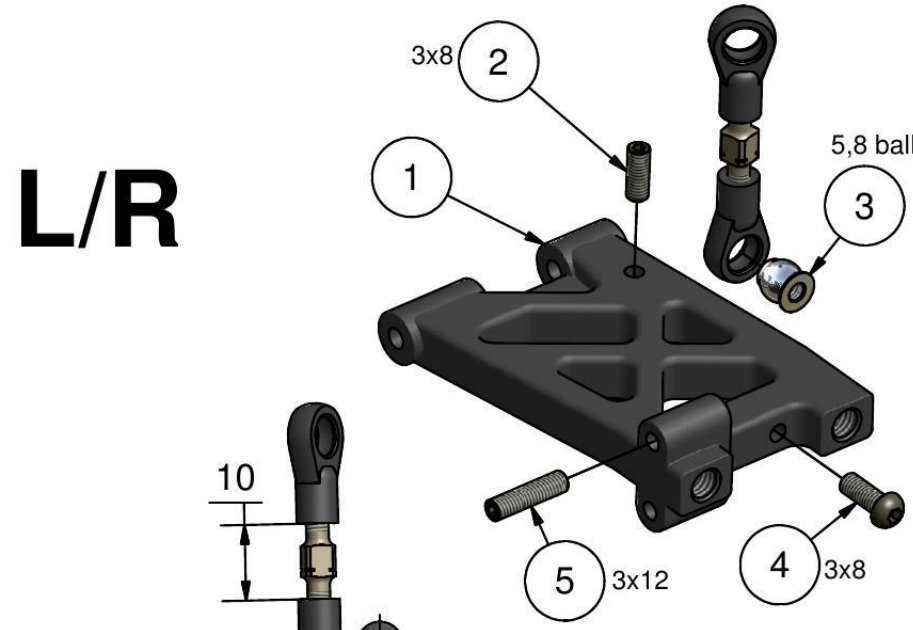

2x

Parts List		
Rif.	n°	Code
1	1	Cap14008B
2	1	Cap17008
3	1	Cap18169
4	1	Cap17032
5	1	Cap17005

L/R

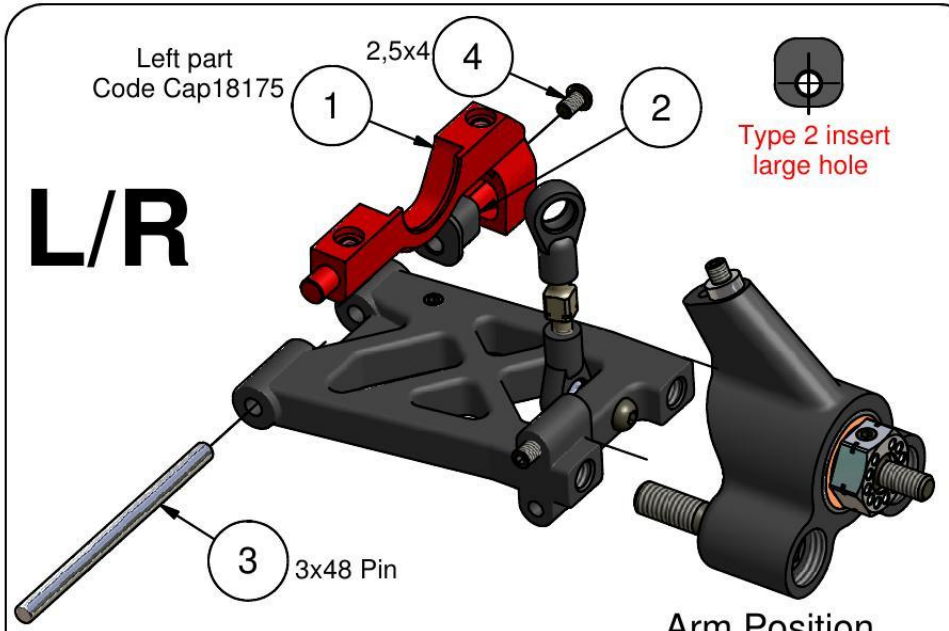

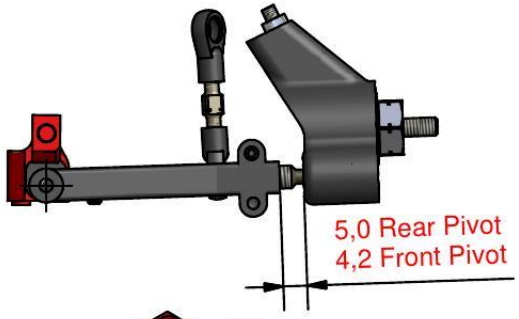

Arm Position

IN - - - - - - - - OUT

Type 1	Type 2	Type 1
-1,5	0	+1,5

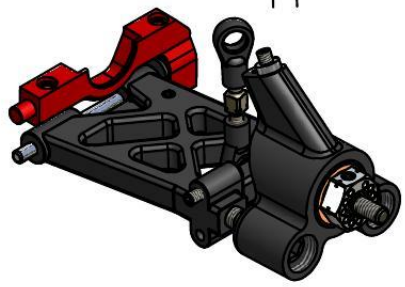

2x

Parts List		
Rif.	n°	Code
1	1	Cap18174
2	1	Cap14038-Q
3	1	Cap18079
4	1	Cap18019

Step 11.2 - Rear Suspension - BAG 11

Capricorn RC

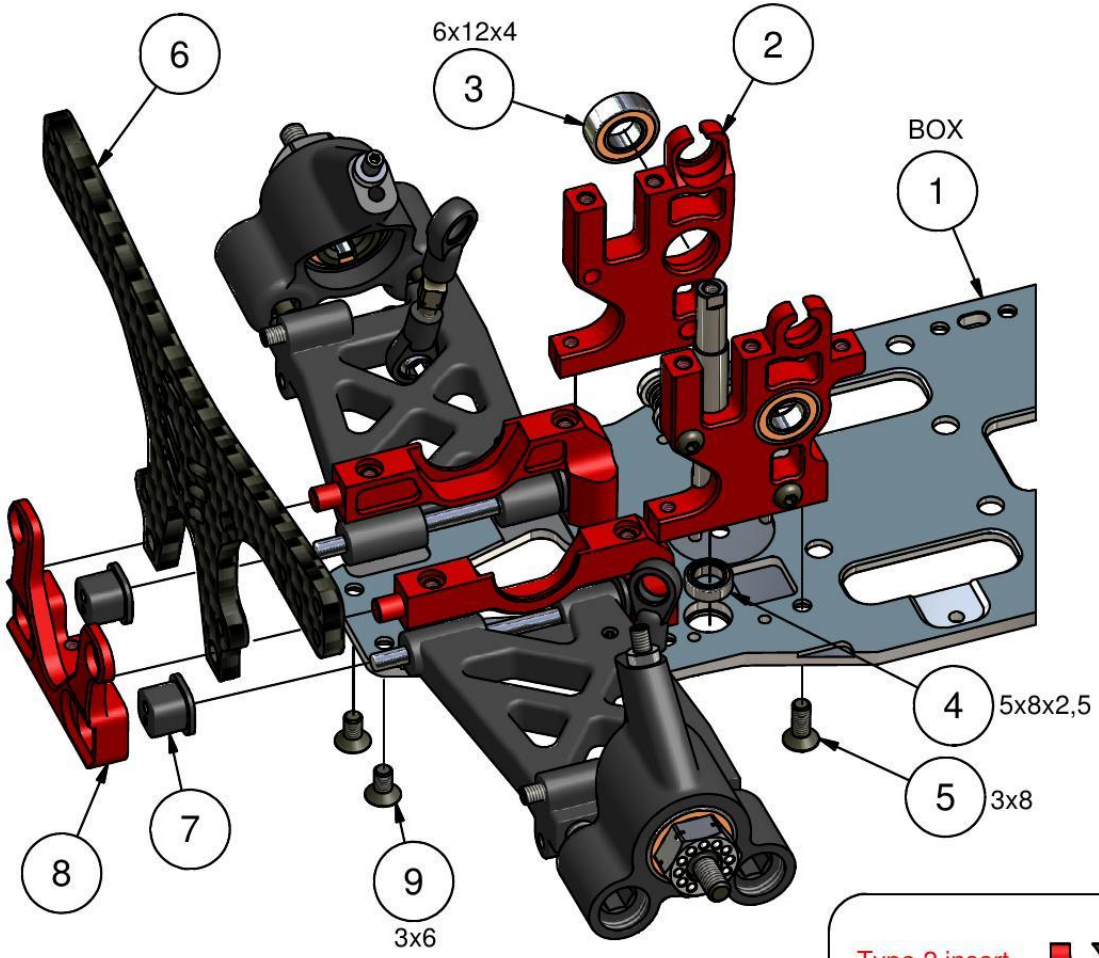

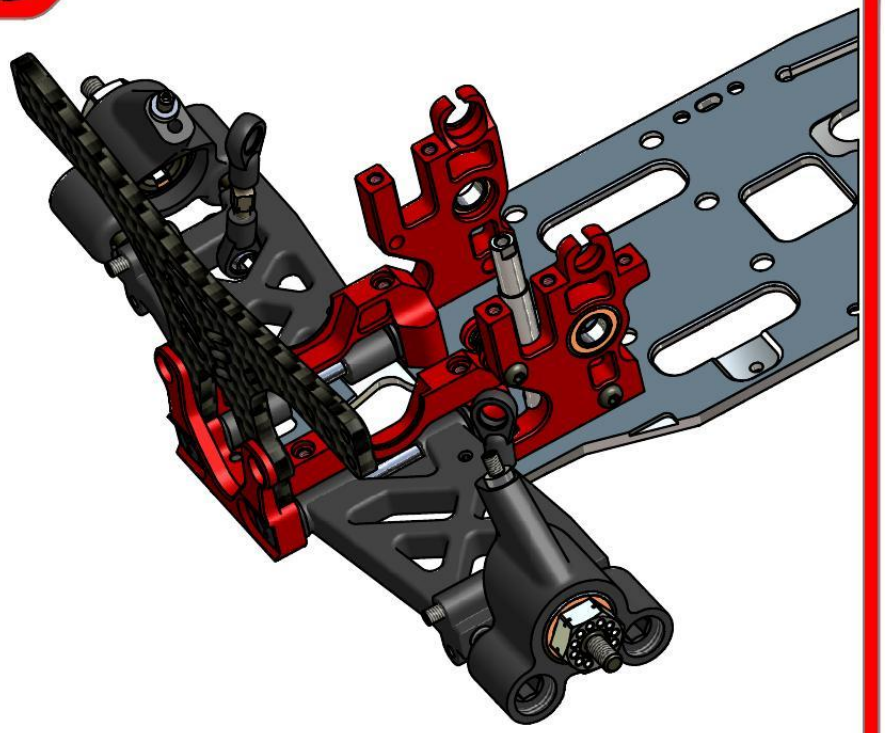



Big Bore LP Set
Code Cap18223

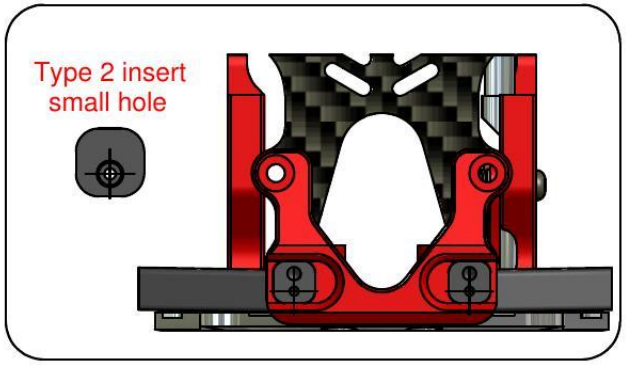

Parts List		
Rif.	n°	Code
1	1	Cap18222
2	1	Cap18188
3	1	Cap16021
4	1	Cap16019
5	4	Cap17031
6	1	Cap18190
7	4	Cap14038-Q
8	1	Cap18178
9	4	Cap17029

Made in Italy

Step 11.3 - Rear Transmission - BAG 11

Capricorn RC

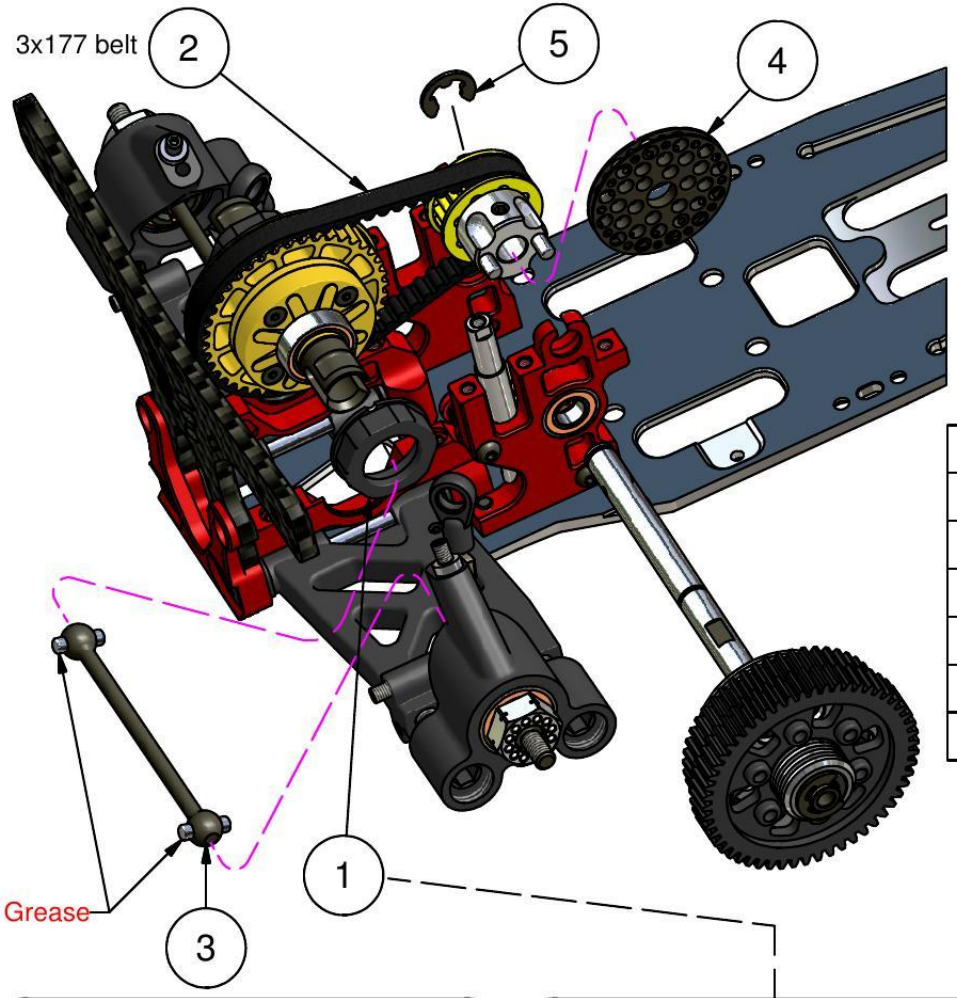

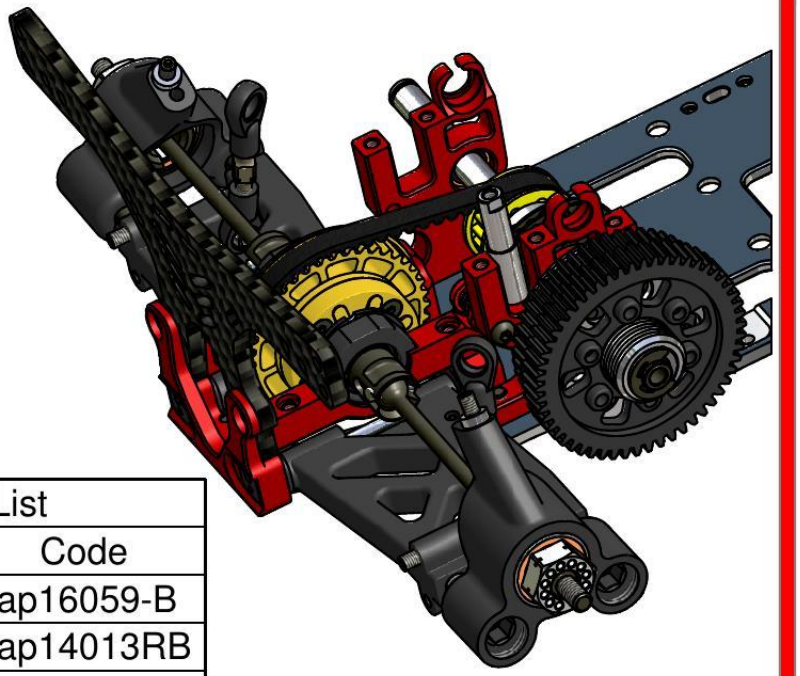

Parts List		
Rif.	n°	Code
1	2	Cap16059-B
2	1	Cap14013RB
3	2	Cap18081
4	1	Cap18068
5	1	Cap17002



52mm CVD version Option
code Cap18201-K



Metal version Option
code Cap16059M

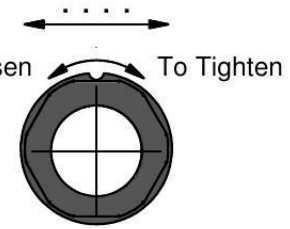

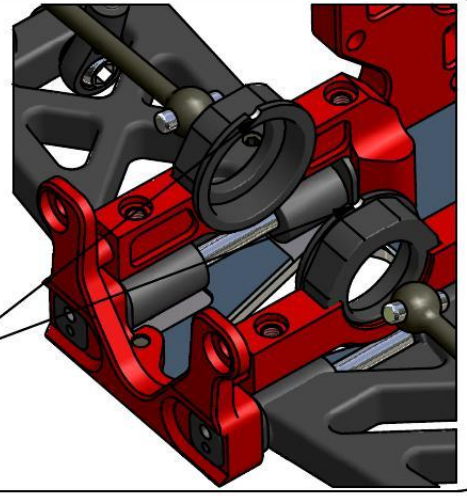

Note:
Set right and left side
in the same way for a
correct belt tension

Made in Italy

Step 11.4 - Rear Suspension - BAG 11

Capricorn RC

L/R

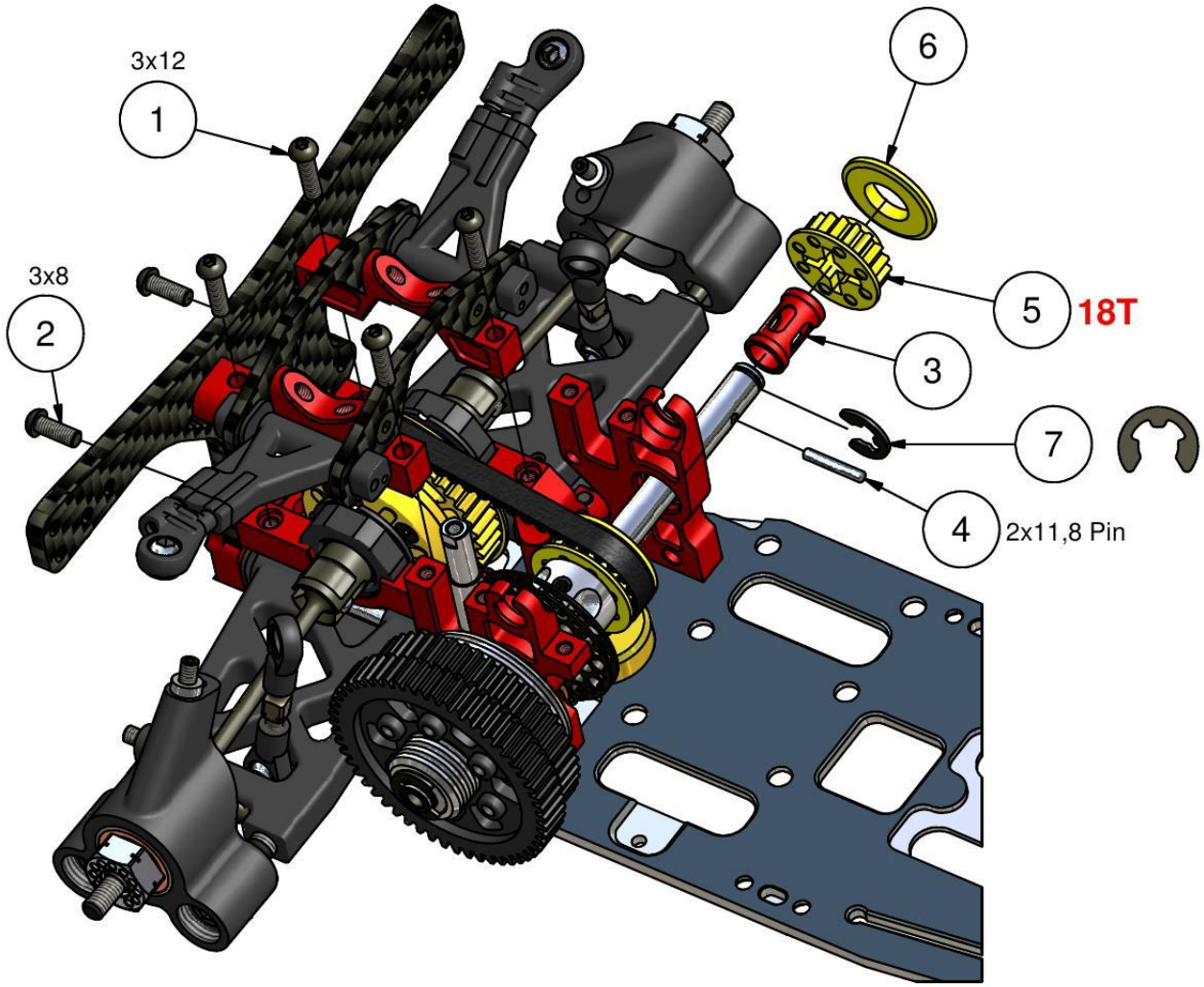

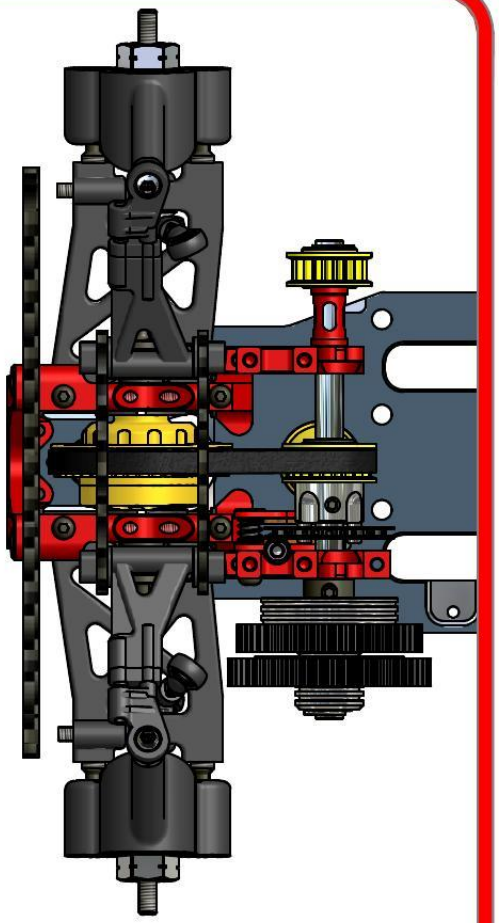

Parts List		
Rif.	n°	Code
1	4	Cap17026
2	2	Cap17032
3	1	Cap14022-18
4	1	Cap17016
5	1	Cap14023
6	1	Cap14023
7	1	Cap17002

Made in Italy

Step 11.5 - Rear Suspension - BAG 11

Capricorn RC

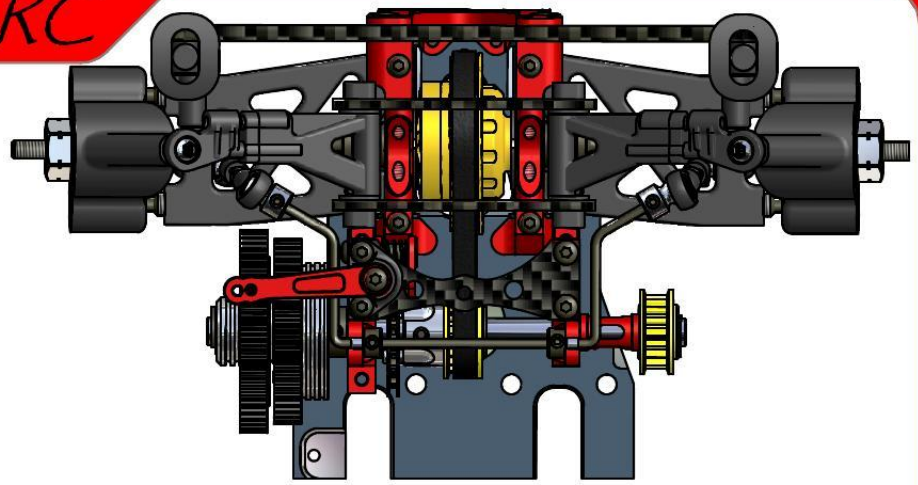

L/R

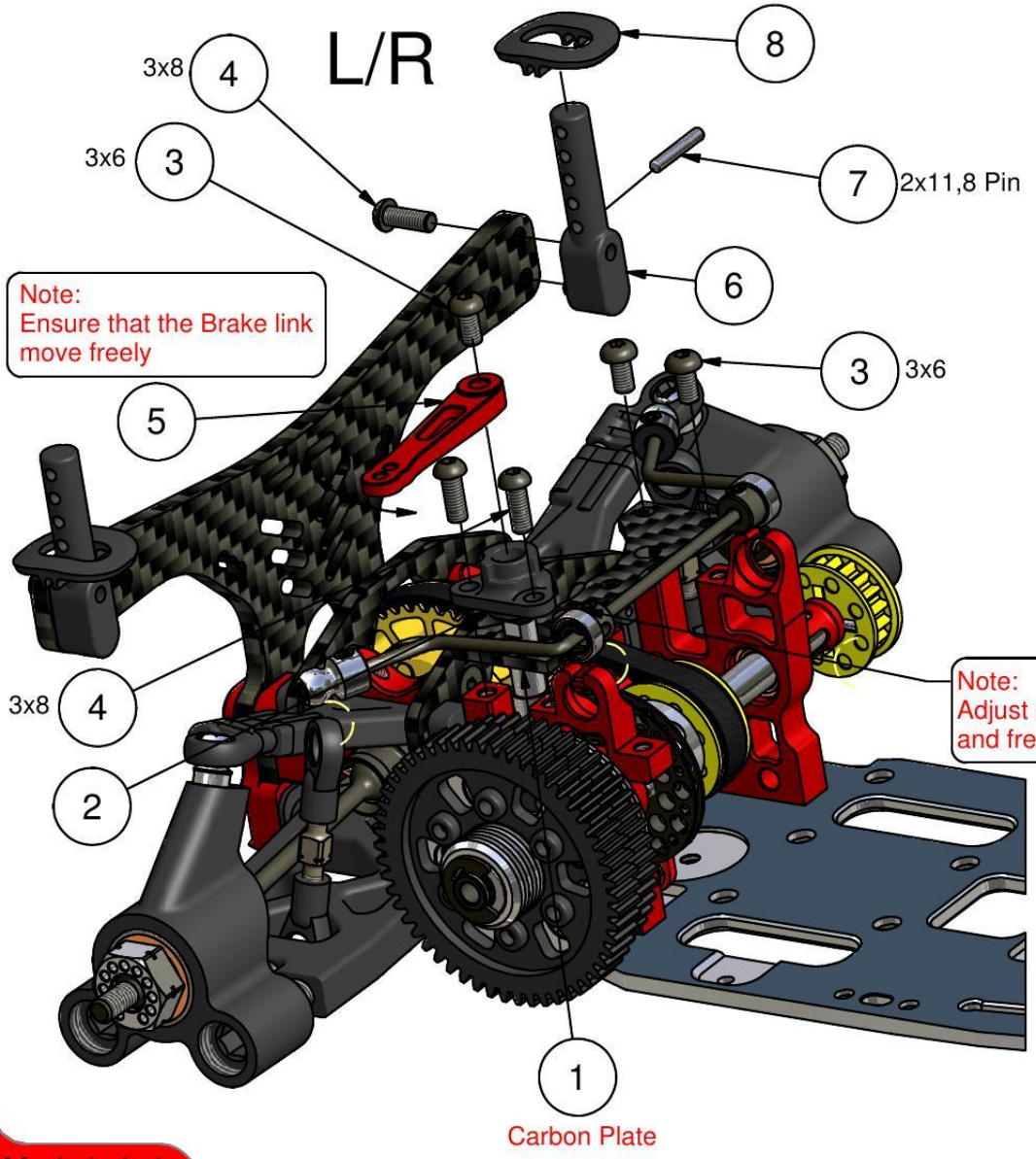

Note:
Ensure that the Brake link move freely

Note:
Adjust position for minimum offset and freely rear Anti-Roll bar movement

Zoom view

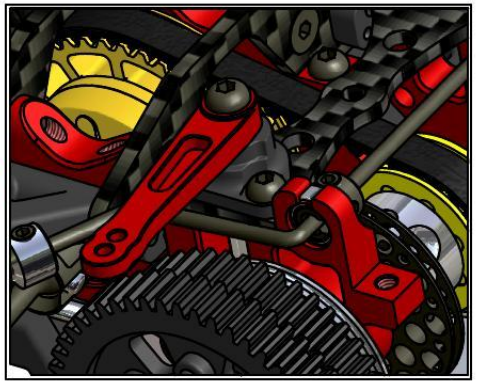

Parts List		
Rif.	n°	Code
1	1	Cap18063
2	1	Cap16068P
3	3	Cap17030
4	4	Cap17032
5	1	Cap 2392B
6	2	Cap15012
7	2	Cap17016
8	2	Cap15013

Made in Italy

Step 12.0 - Central Uprights Adjustable weights - BAG 12

Capricorn RC

Adjust weights scale position to obtain desidered dynamic balance
(maximum of 5 different weights)

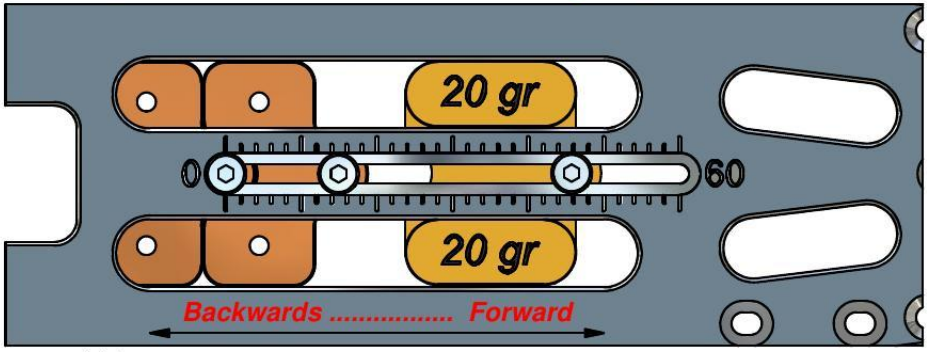

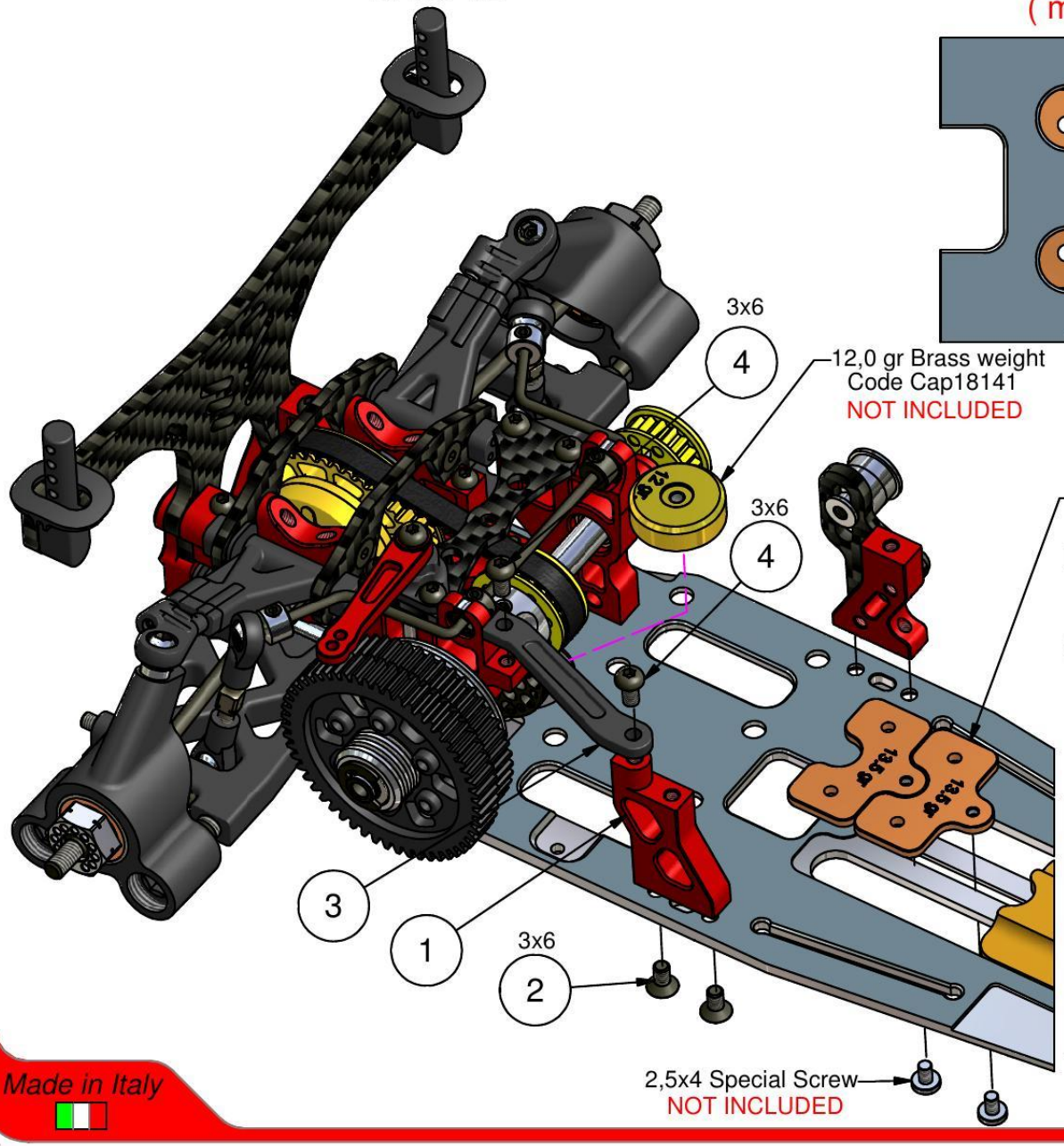

Brass
20,0 gr Code Cap18221

Special alloy
13,5 gr Code Cap18162-13,5
27,0 gr Code Cap18162-27







Parts List		
Rif.	n°	Code
1	1	Cap16036
2	5	Cap17029
3	1	Cap15009P
4	2	Cap17030

Made in Italy

Step 12.1 - Middle Transmission - BAG 12

Capricorn RC

Parts List		
Rif.	n°	Code
1	1	Cap14012RB
2	1	Cap14011RB
3	3	Cap17030
4	2	Cap16073
5	4	Cap14041KS
6	1	Cap18064
7	4	Cap17034

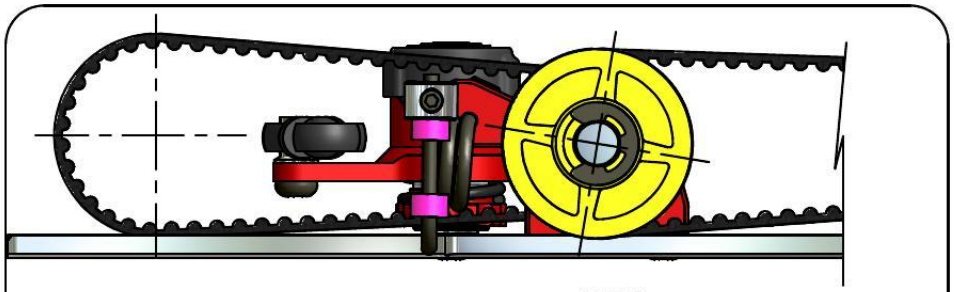

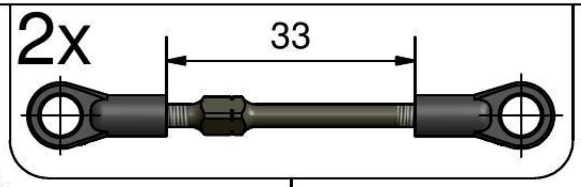

Made in Italy

Step 13.0

- Front Suspension - BAG 13

Capricorn RC

L/R

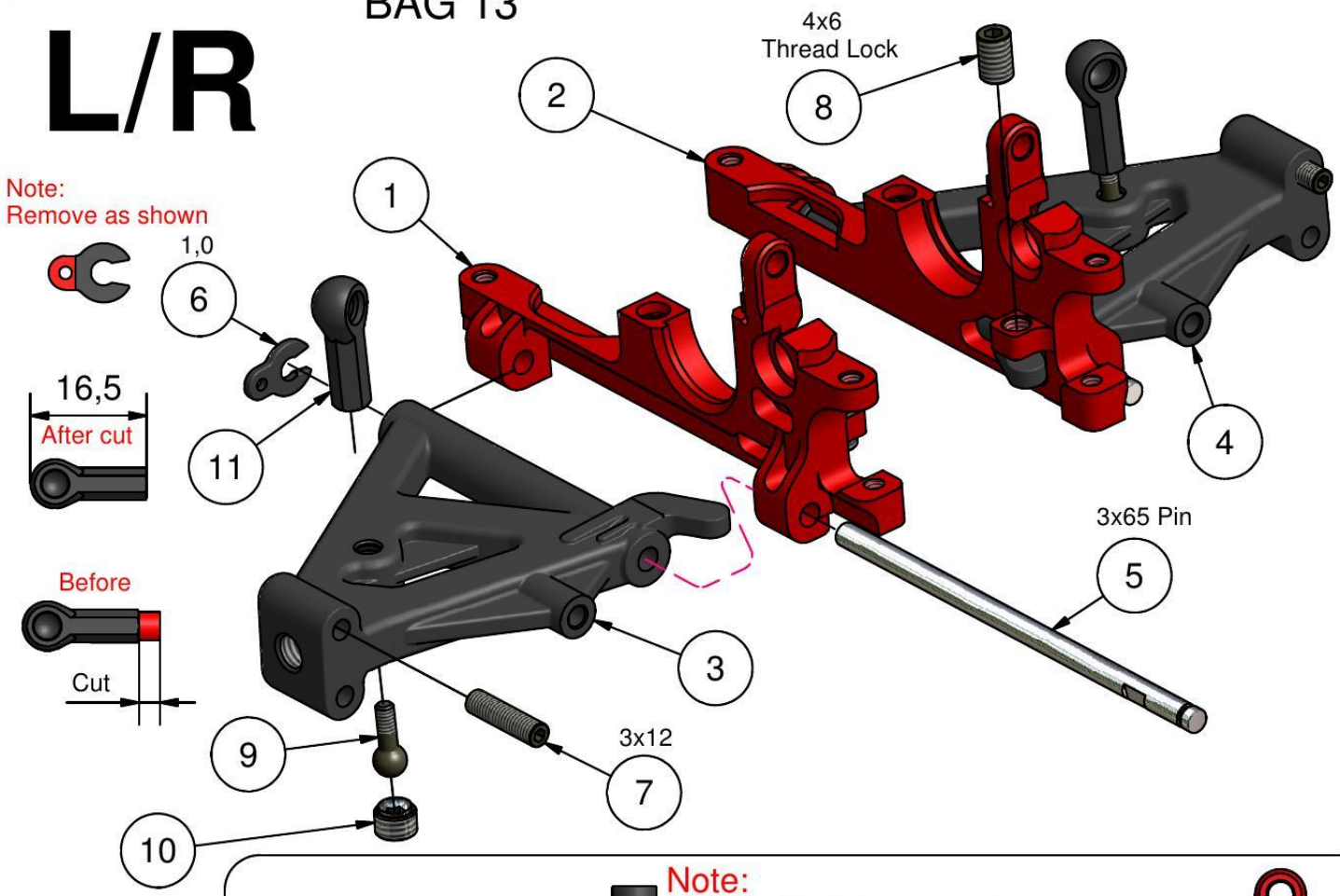

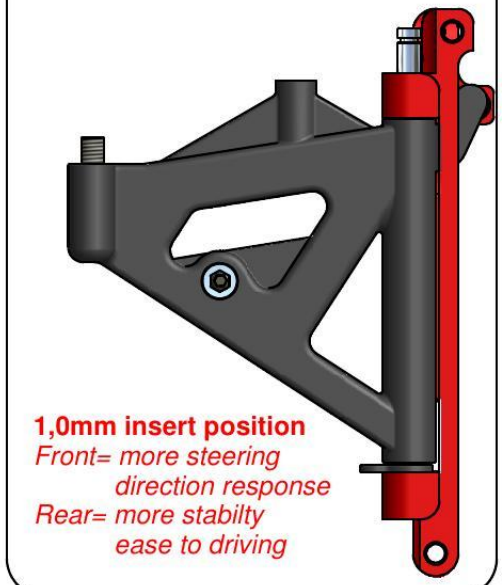

1,0mm insert position
Front= more steering direction response
Rear= more stabilty ease to driving



Parts List		
Rif.	n°	Code
1	1	Cap18183
2	1	Cap18184
3	1	Cap14005B
4	1	Cap14006B
5	2	Cap16051
6	2	Cap14031
7	2	Cap17005
8	2	Cap17011
9	2	Cap17051
10	2	Cap17052
11	2	Cap17041

Made in Italy

- Front Suspension -
BAG 13

Capricorn RC

L/R

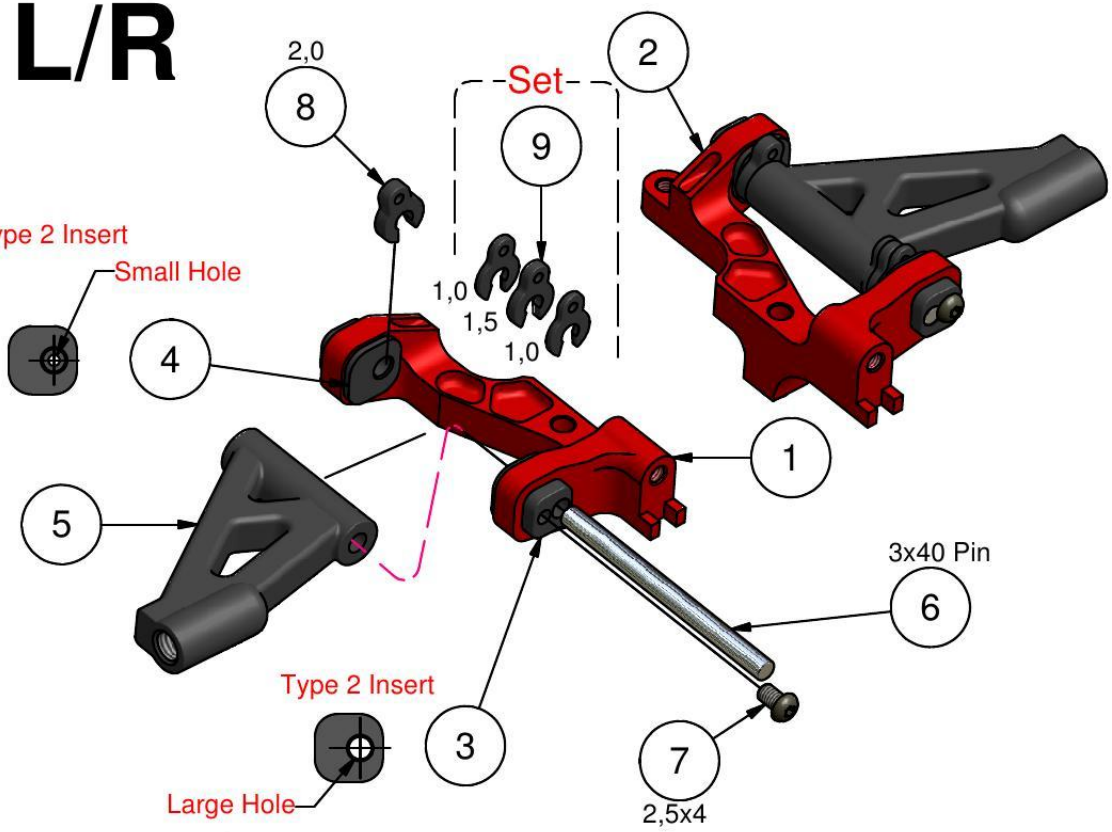



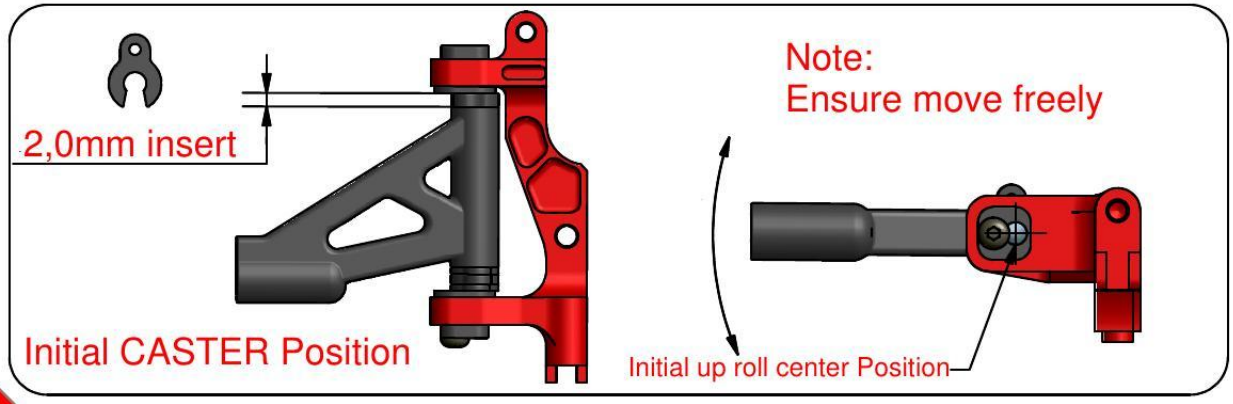

Parts List		
Rif.	n°	Code
1	1	Cap18185
2	1	Cap18186
3	2	Cap14038-Q
4	2	Cap14038-Q
5	2	Cap14007B
6	2	Cap 2086
7	2	Cap18019
8	2	Cap14031-2.0
9	2	Cap14031

Made in Italy

Step 13.2

- Front Suspension -
BAG 13

Capricorn RC

Note:
Adjust position for minimum offset
and freely front Anti-Roll bar movement

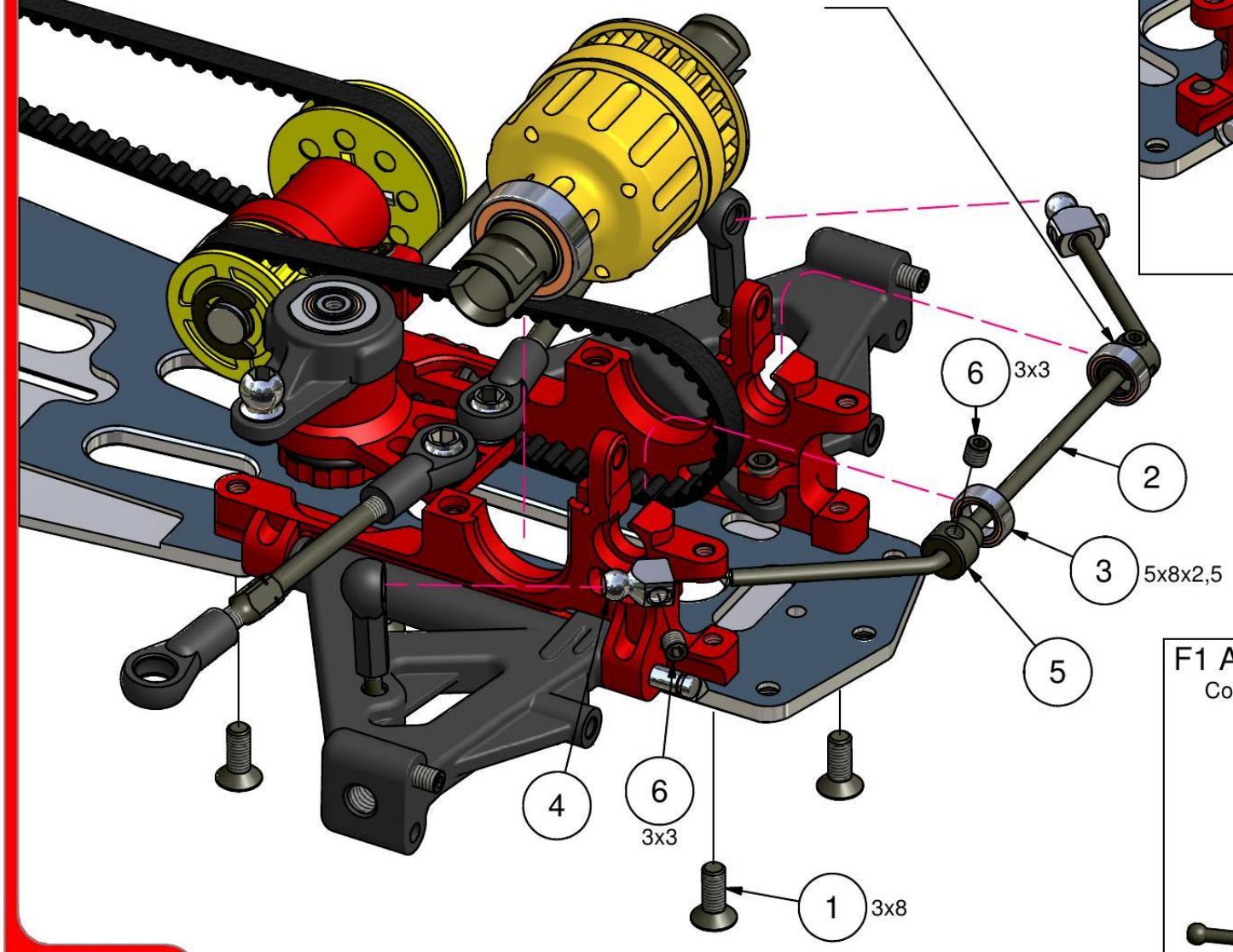

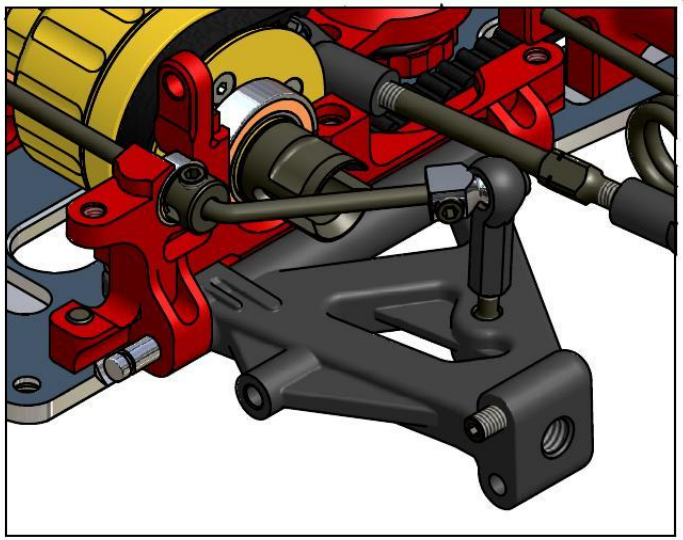

Parts List		
Rif.	n°	Code
1	4	Cap17031
2	1	Cap18075-2.3
3	2	Cap16019
4	2	Cap 2485-2.3
5	2	Cap18088-2.3
6	4	Cap17006

F1 Anti-Roll bar kit
Code Cap18012



Made in Italy

Step 13.3

- Front Suspension - BAG 13

Capricorn RC



Big Bore LP Set
Code Cap18030

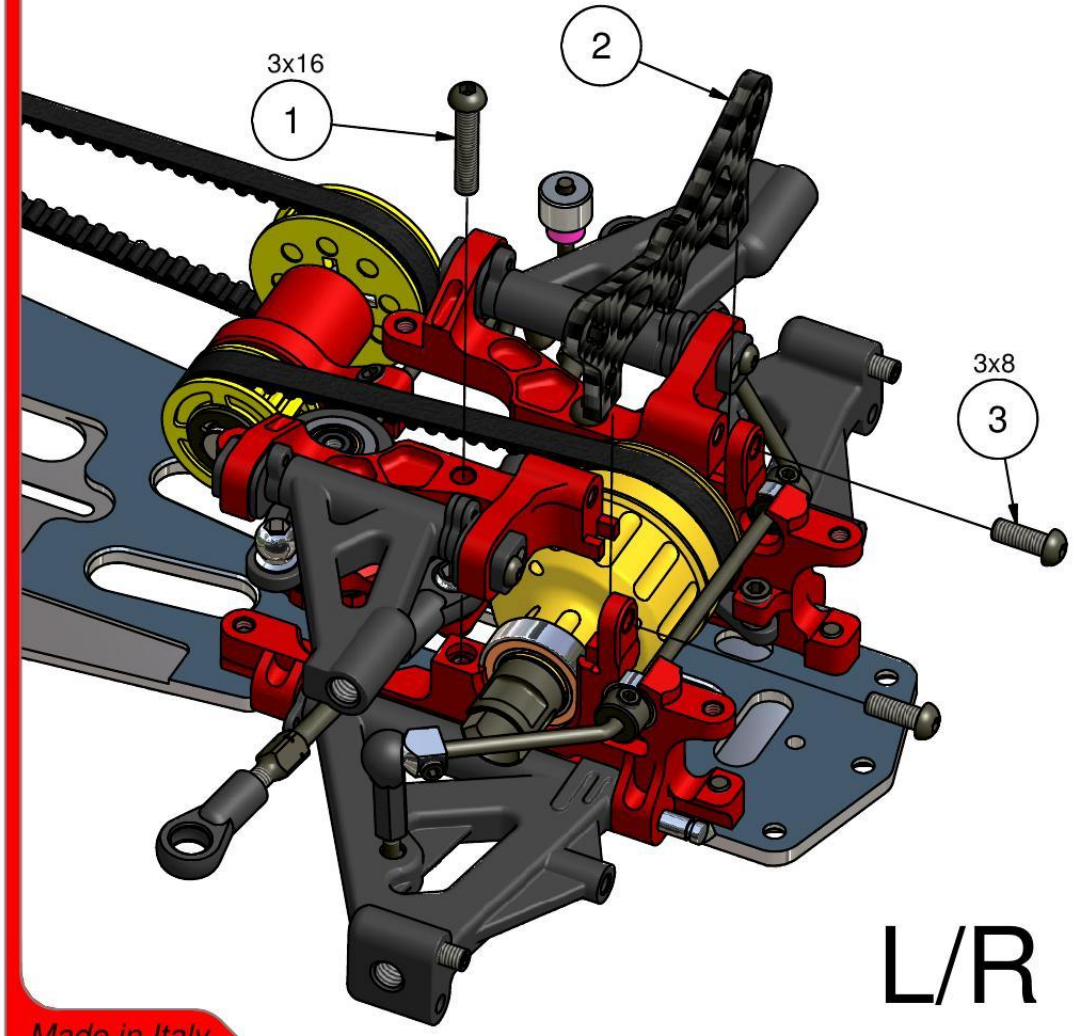

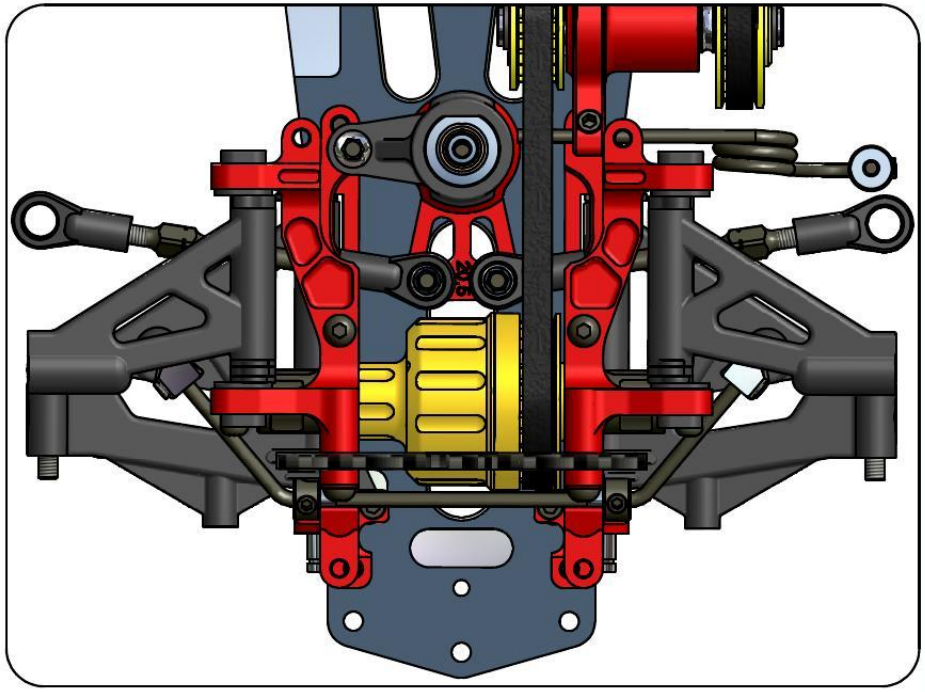

Parts List		
Rif.	n°	Code
1	2	Cap17028
2	1	Cap18136
3	2	Cap17032

L/R

Made in Italy

Step 13.4

- Front Suspension -
BAG 13

Capricorn RC

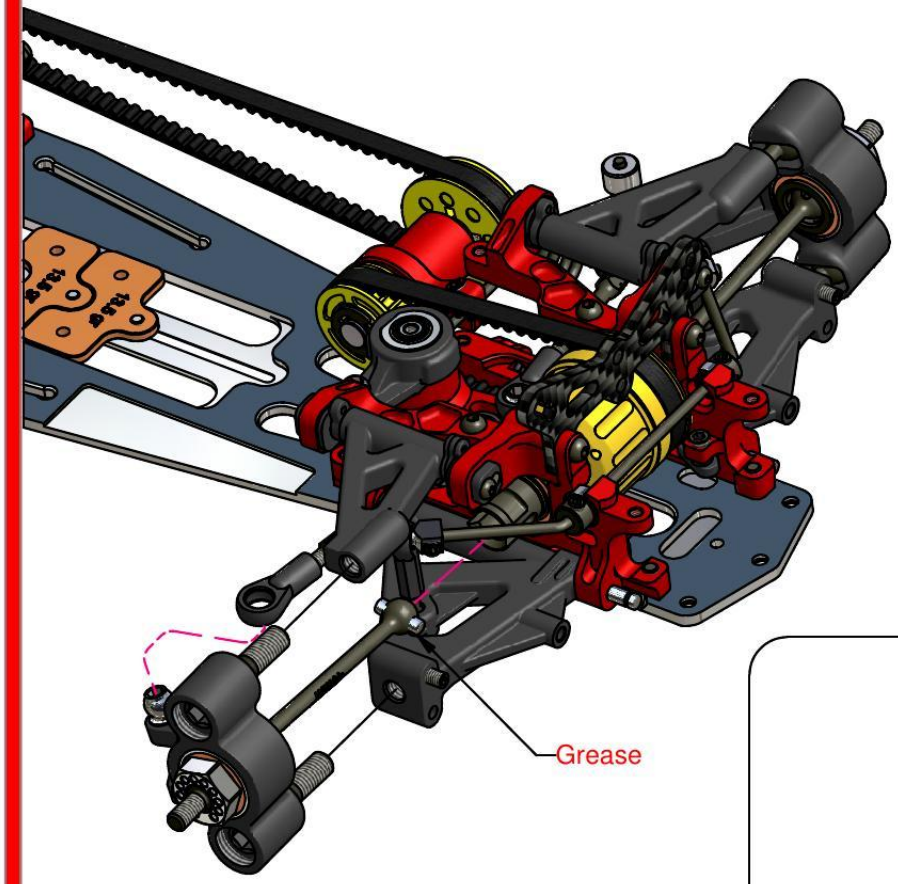

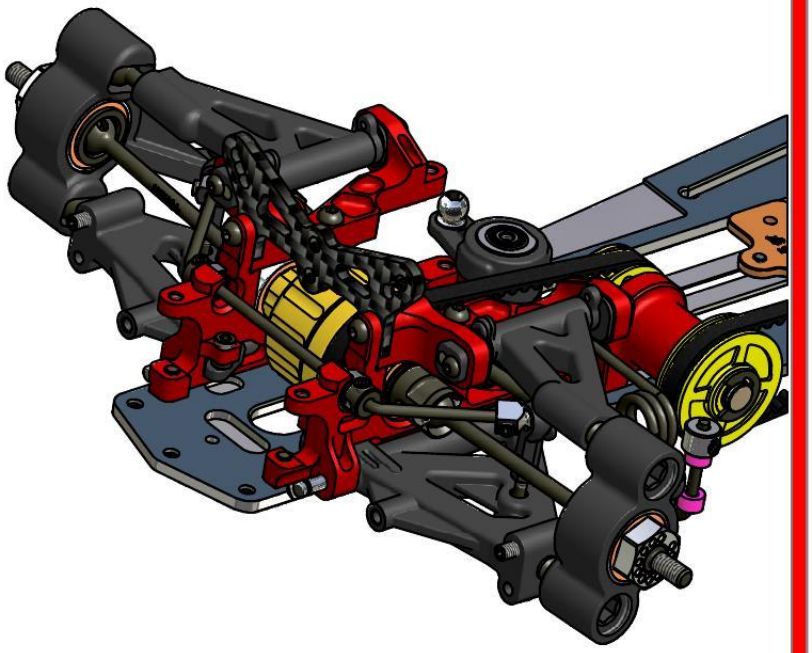

L/R

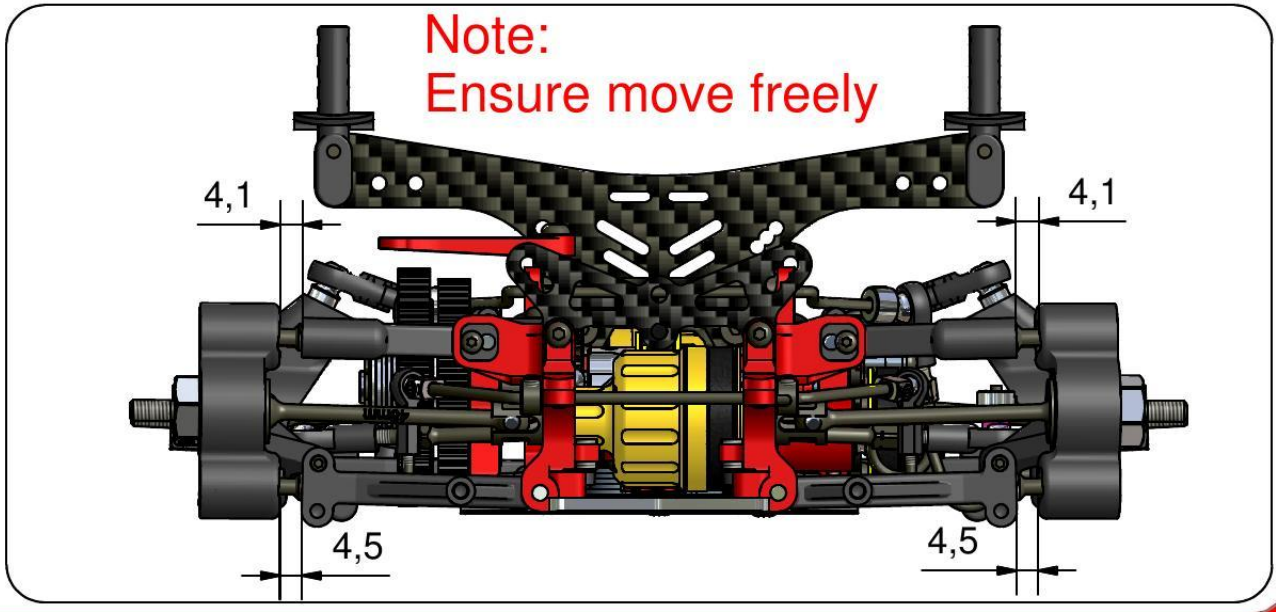

Made in Italy

Step 13.5

- Shock Assembly - BAG 13

Capricorn RC

Front



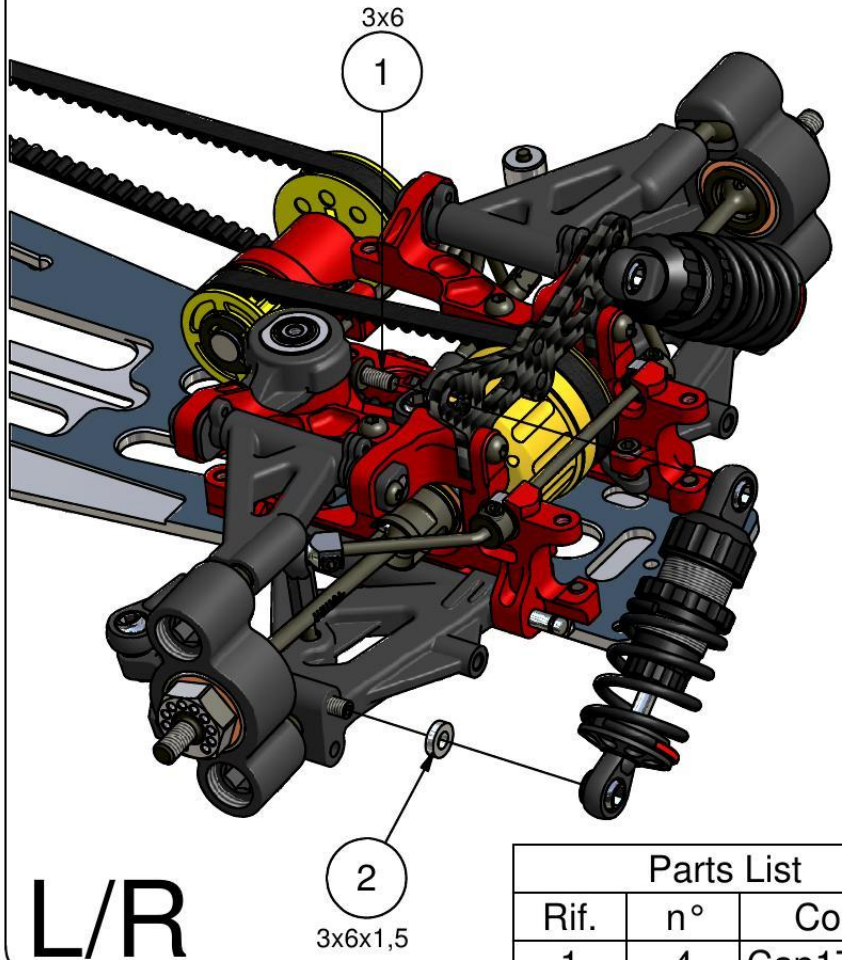

L/R

Parts List		
Rif.	n°	Code
1	4	Cap17030
2	4	Cap22019

Rear

L/R

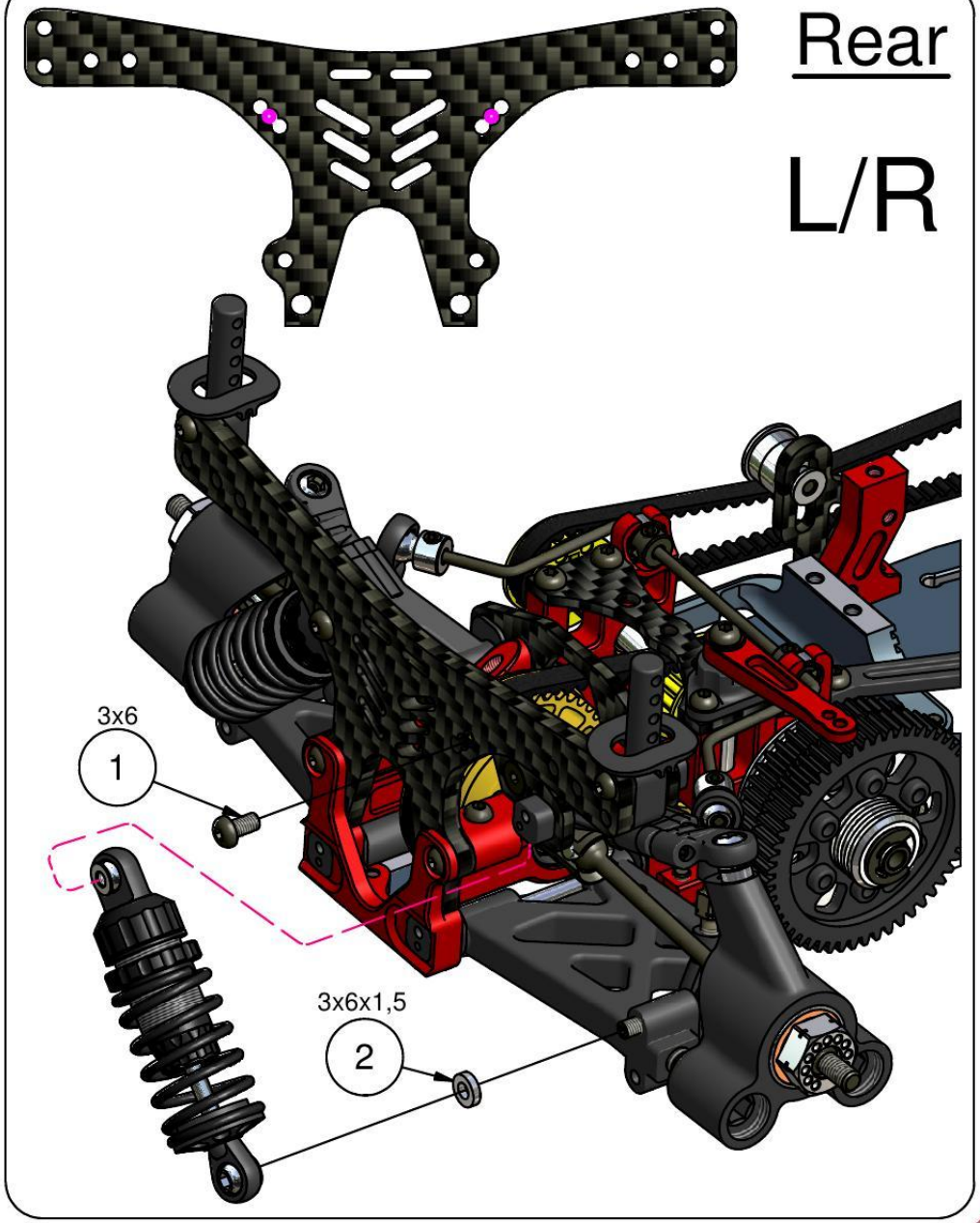

Made in Italy

Step 13.6 - Bodymounts Assembly - BAG 13

Capricorn RC

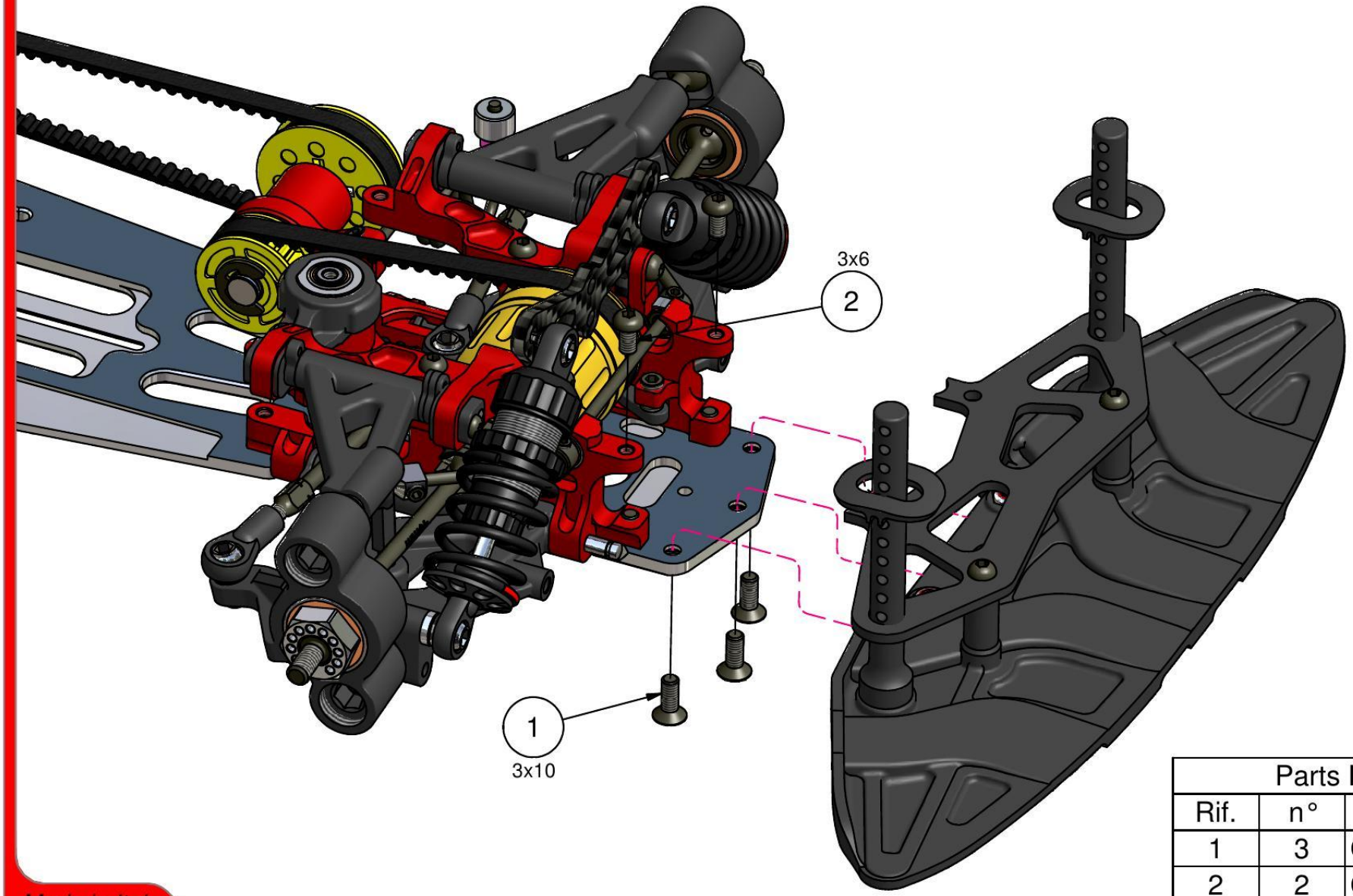

Parts List		
Rif.	n°	Code
1	3	Cap17031
2	2	Cap17030

Made in Italy

Step 14.0 - Fuel Tank & F.F.S. - BAG 14

Capricorn RC

Parts List		
Rif.	n°	Code
1	1	Cap18194
2	1	Cap16061
3	4	Cap17031
4	2	Cap22015
5	1	Cap18198
6	3	Cap18199
7	3	Cap 2235

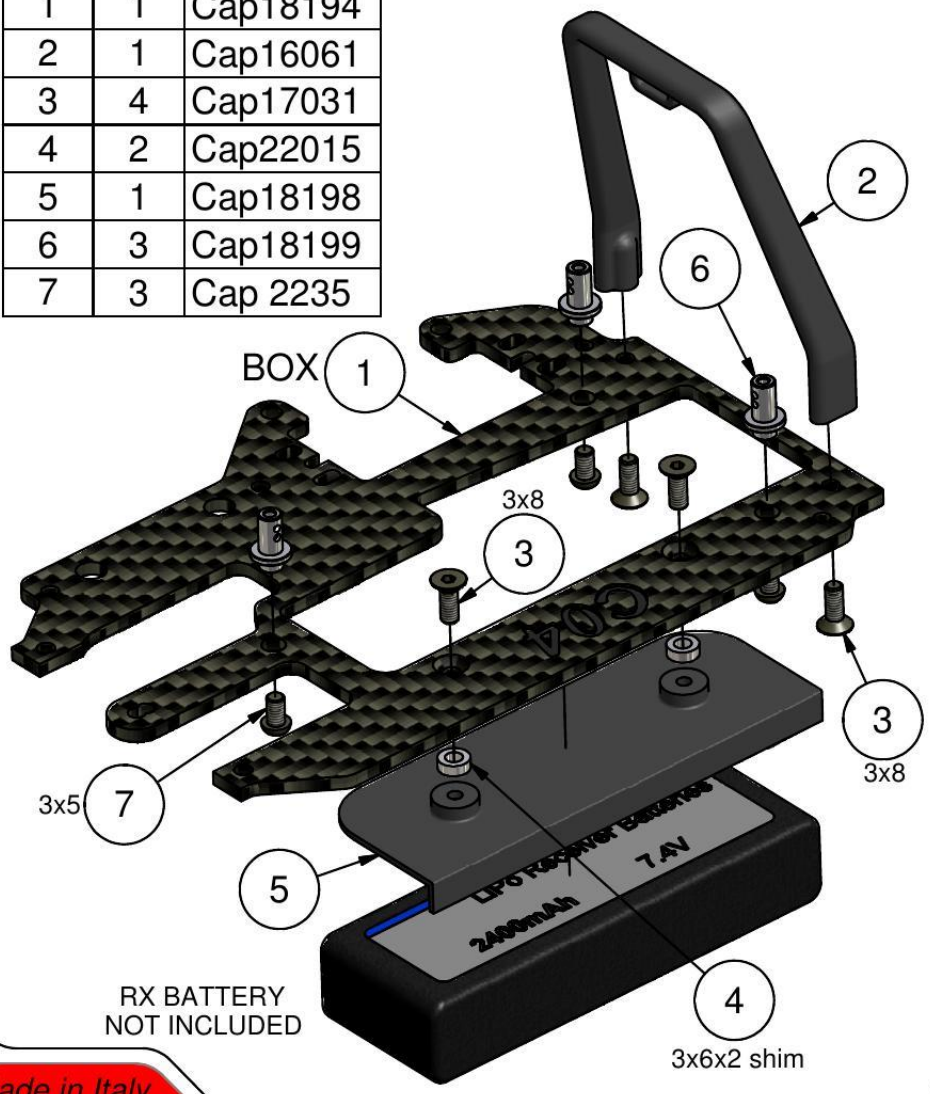

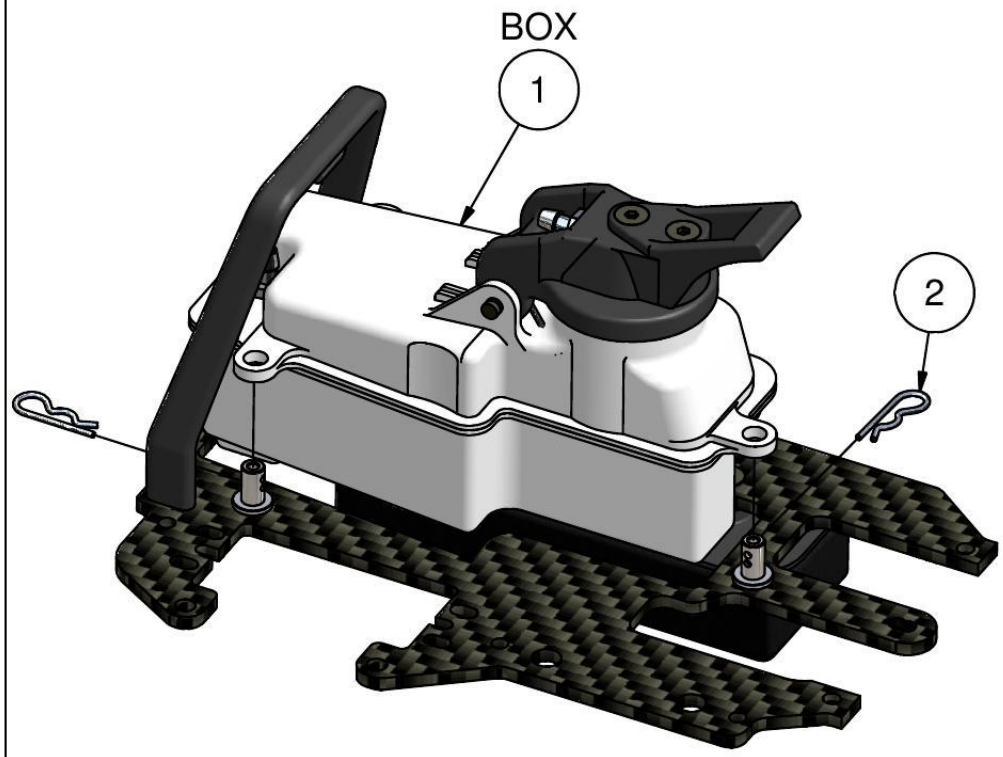

Parts List		
Rif.	n°	Code
1	1	Cap18197
2	3	Cap27002

Made in Italy

Step 14.1

- Electronics -

BAG 14

Capricorn RC

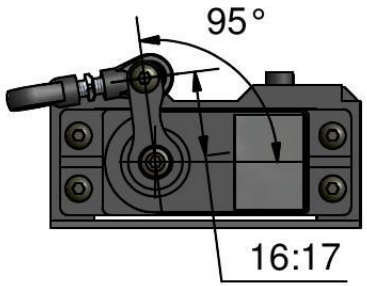

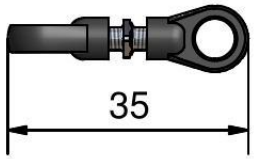

Parts List		
Rif.	n°	Code
1	1	Cap16070-B
2	2	Cap17041
3	4	Cap17028
4	2	Cap16048
5	1	Cap17030
6	1	Cap18169
7	1	Cap40463
8	2	Cap14042KS
1F	1	Cap18072-F
1R	1	Cap18072-R

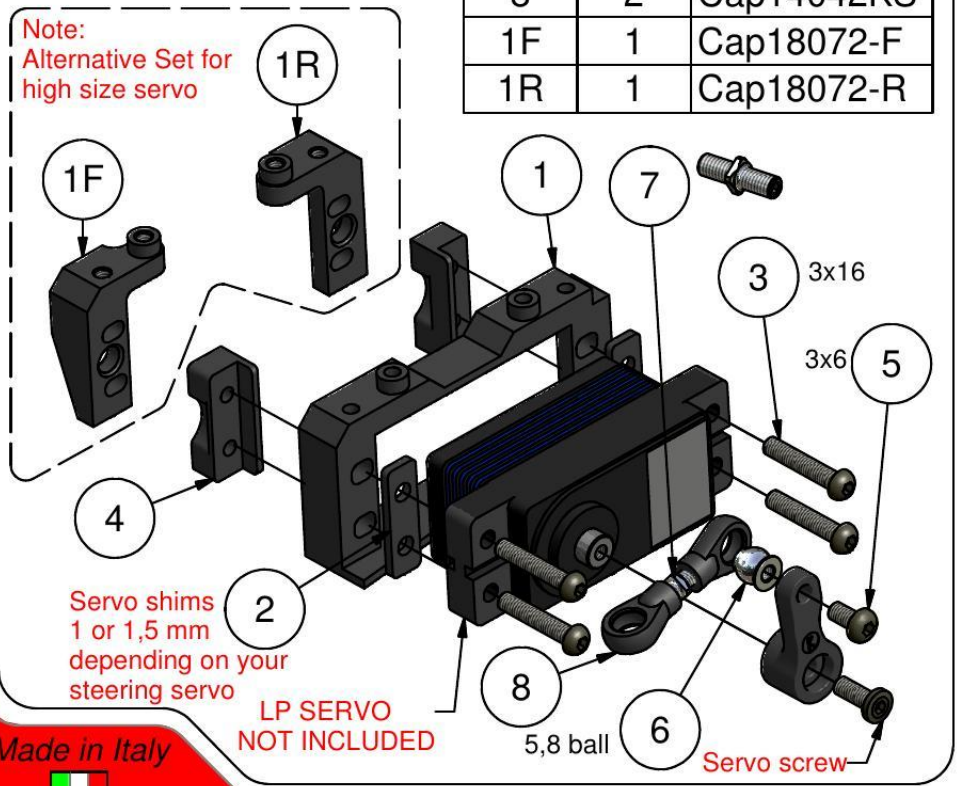

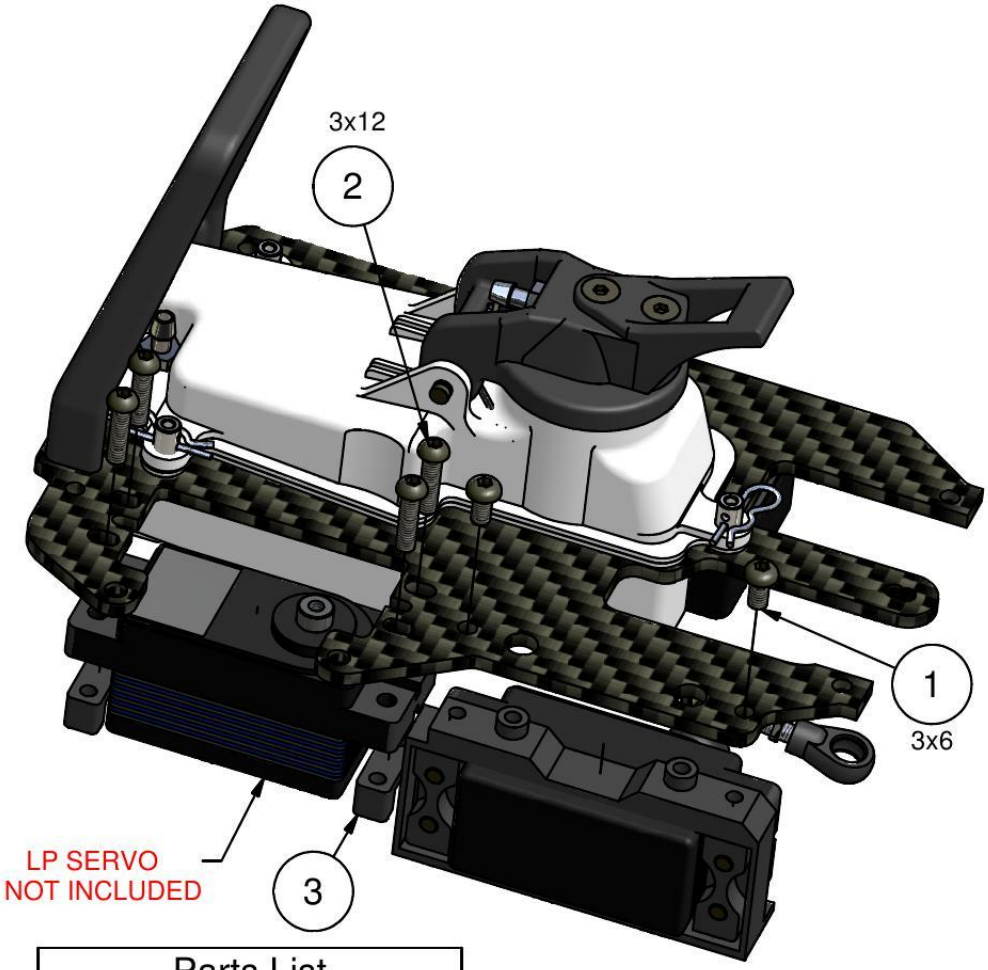

Parts List		
Rif.	n°	Code
1	2	Cap17030
2	4	Cap17026
3	2	Cap16048

Made in Italy

Step 14.2

- Electronics -
BAG 14

Capricorn RC

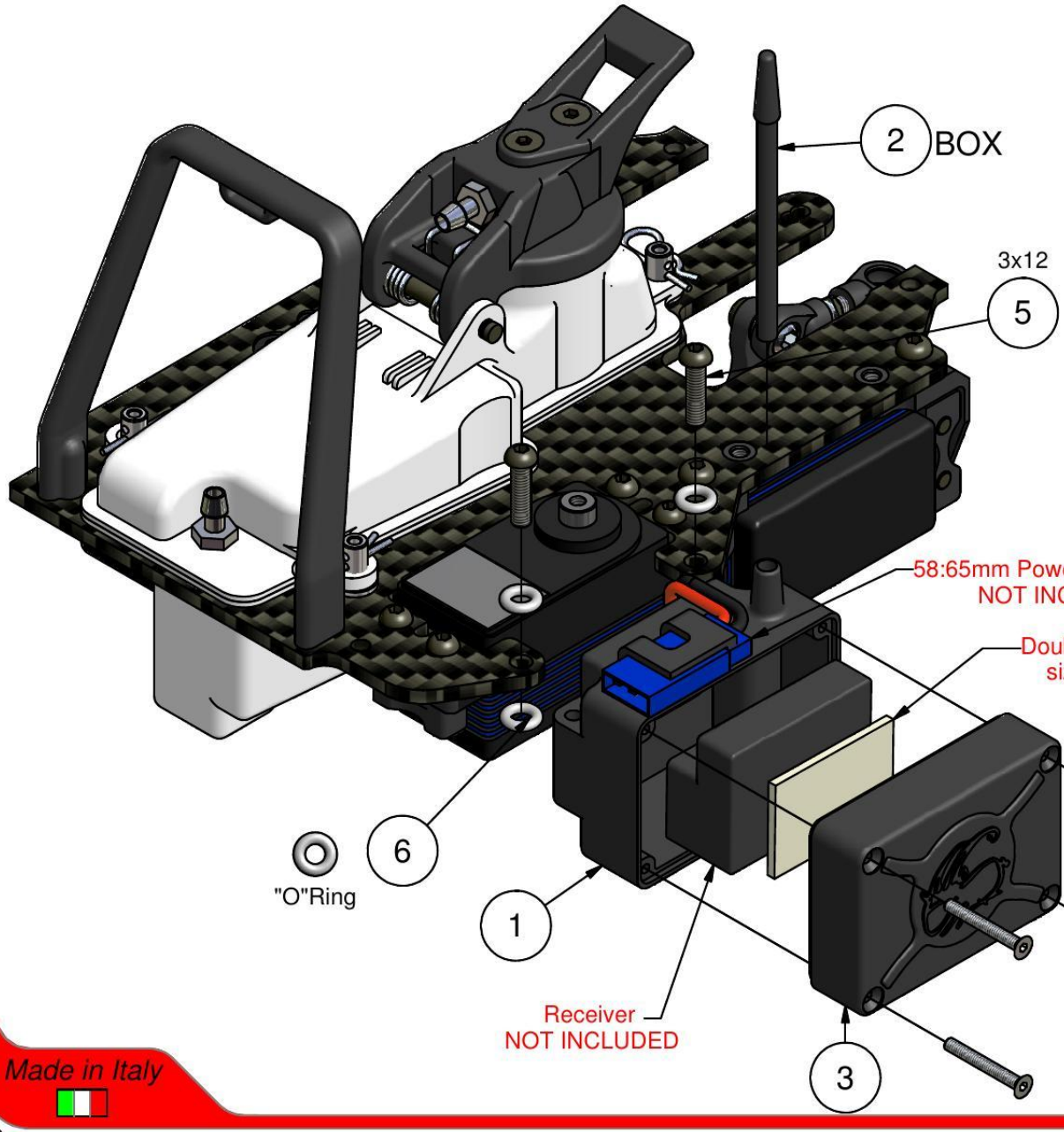

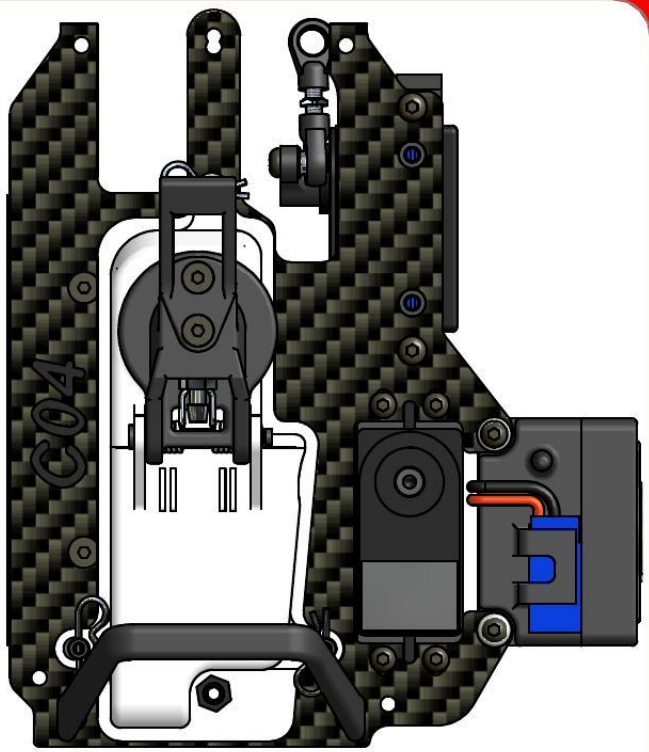

Parts List		
Rif.	n°	Code
1	1	Cap18073
2	1	Cap14001
3	1	Cap18073
4	4	Cap17047
5	2	Cap17026
6	4	Cap18512

Made in Italy

Step 14.3 - Gas/Brake Linkage - BAG 14

Capricorn RC

Note:
Insert link in the brake arm before

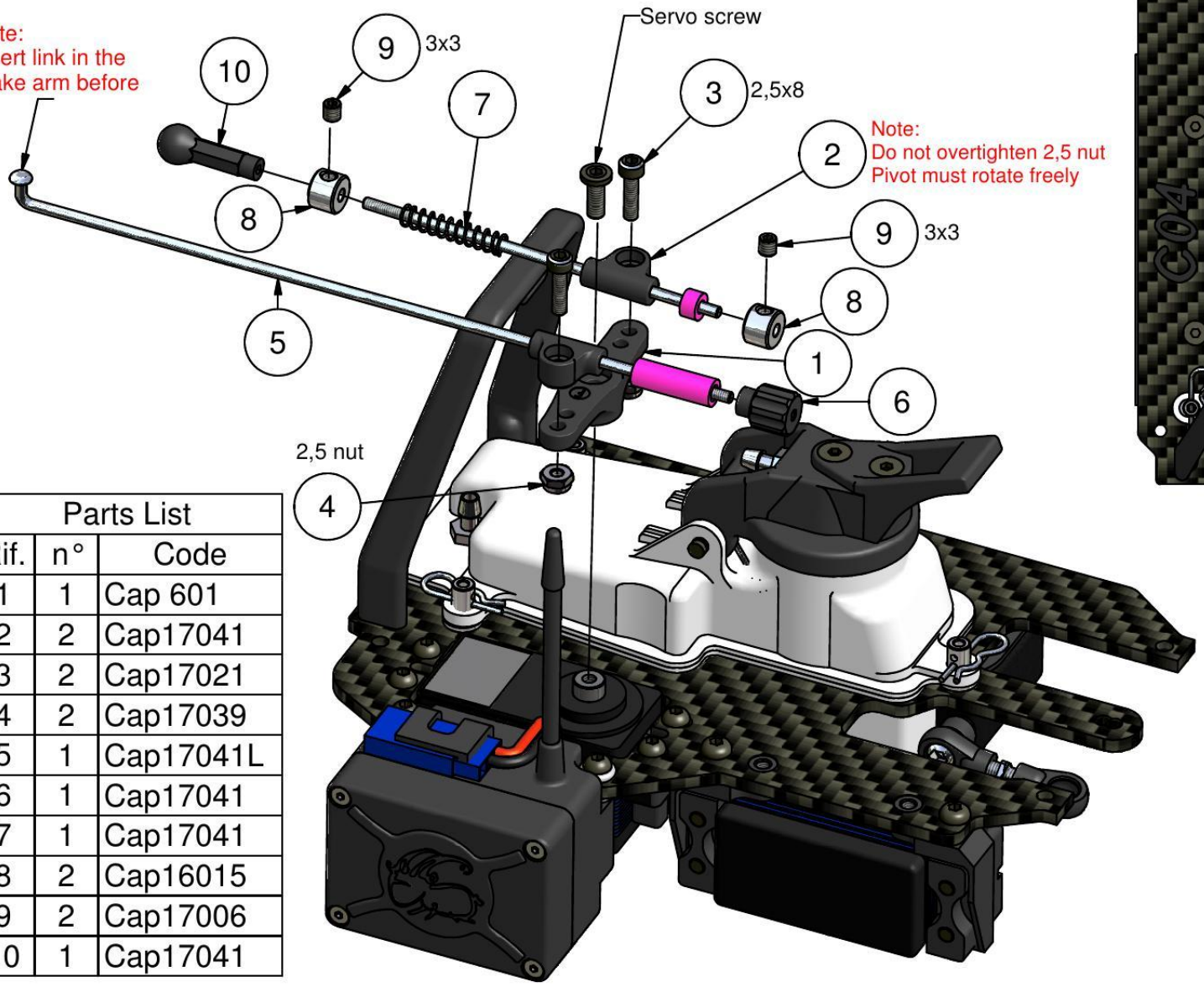

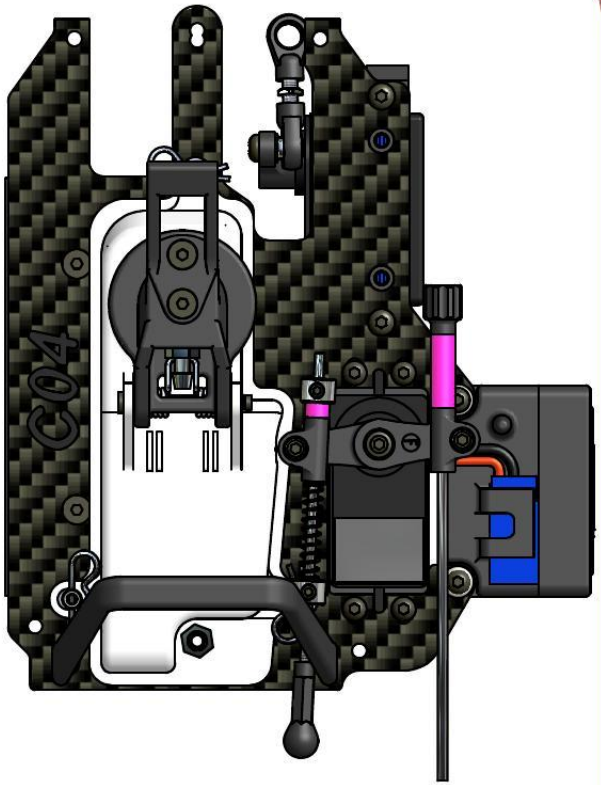

Parts List		
Rif.	n°	Code
1	1	Cap 601
2	2	Cap17041
3	2	Cap17021
4	2	Cap17039
5	1	Cap17041L
6	1	Cap17041
7	1	Cap17041
8	2	Cap16015
9	2	Cap17006
10	1	Cap17041

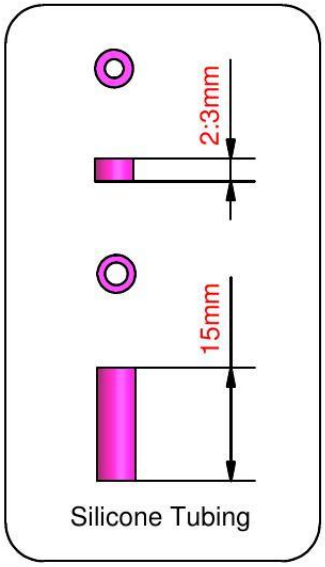

Made in Italy

Step 14.4

- Radio plate assembly -
BAG 14

Capricorn RC

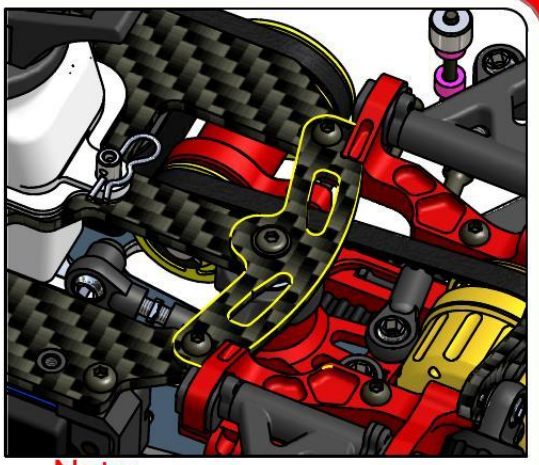

Note:
Use the carbon bridge for
greater front end rigidity

Note:
Attach steering linkage
to 5,8 ball on Servo-saver

Parts List		
Rif.	n°	Code
1	2	Cap17030
2	1	Cap18203
3	2	Cap17032
4	1	Cap17034

Made in Italy

Step 14.5

- Wheels assembly - BAG 14

Capricorn RC

Parts List		
Rif.	n°	Code
1	2	Front wheel
2	2	Rear wheel
3	4	Cap 854

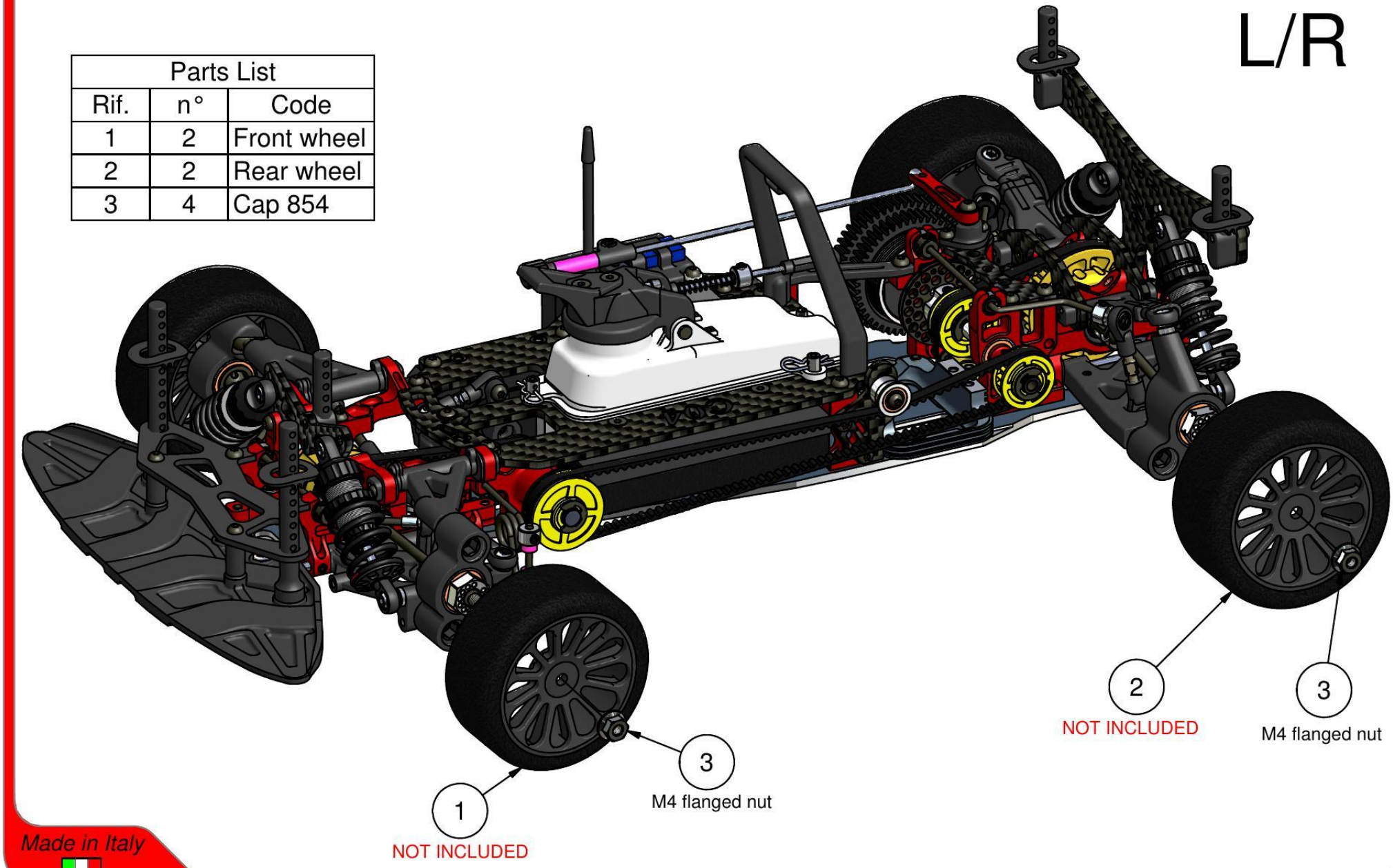

Made in Italy

Step 15.0

- Clutch -
BAG 15

Capricorn RC

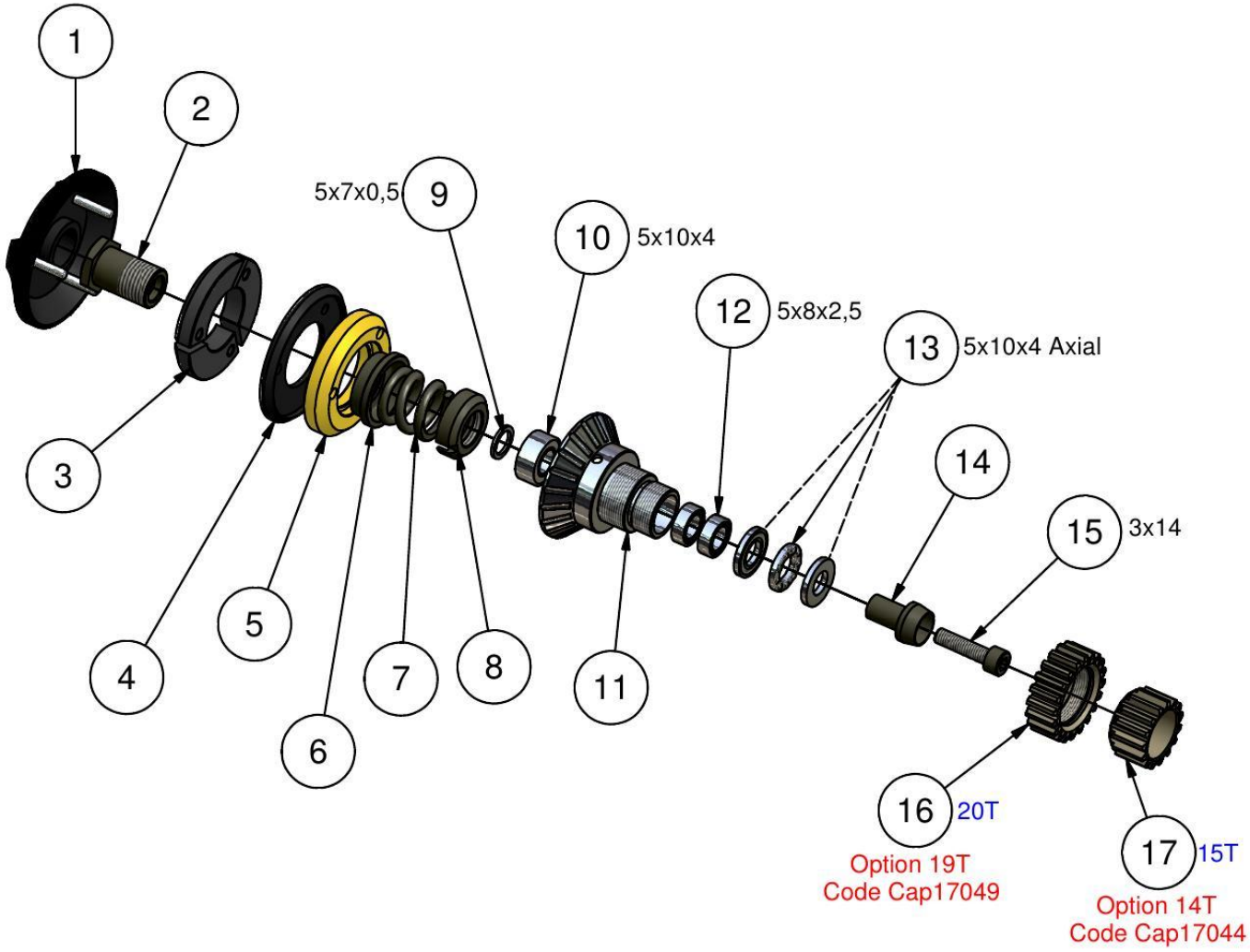

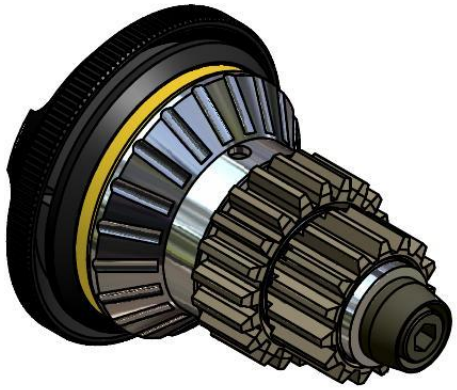

Parts List		
Rif.	n°	Code
1	1	Cap 405WC
2	1	Cap 408
3	1	Cap 414
4	1	Cap 411M08
5	1	Cap 403-08
6	1	Cap 410WC
7	1	Cap 417
8	1	Cap 409
9	3	Cap 434-0,5
10	1	Cap 413
11	1	Cap407A
12	2	Cap 413
13	1	Cap 412
14	1	Cap 406-08
15	1	Cap 406-08
16	1	Cap17050
17	1	Cap17045

Made in Italy

Step 15.1

- Clutch -
BAG 15

Capricorn RC

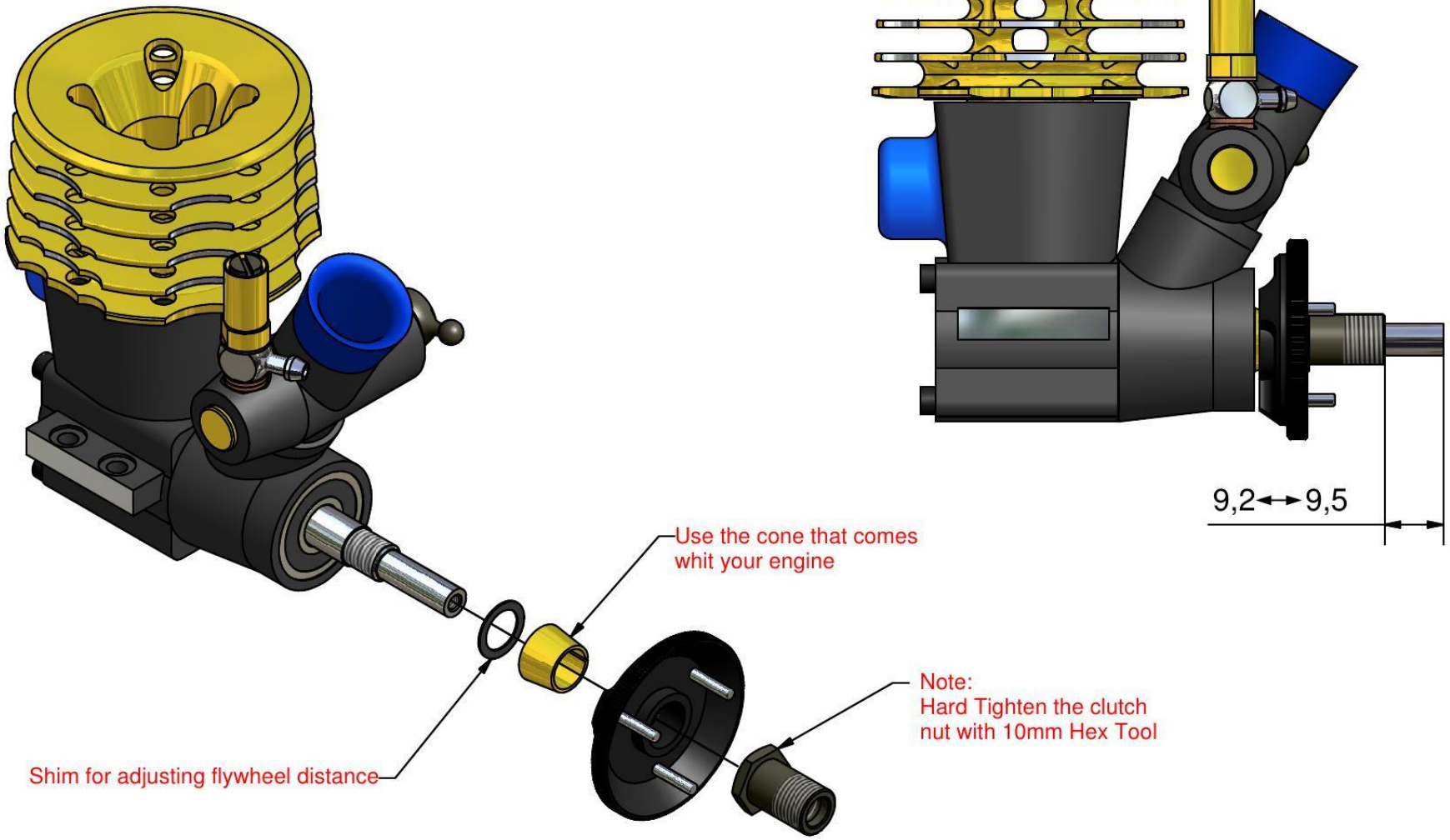

Made in Italy

Step 15.2

- Clutch -
BAG 15

Capricorn RC

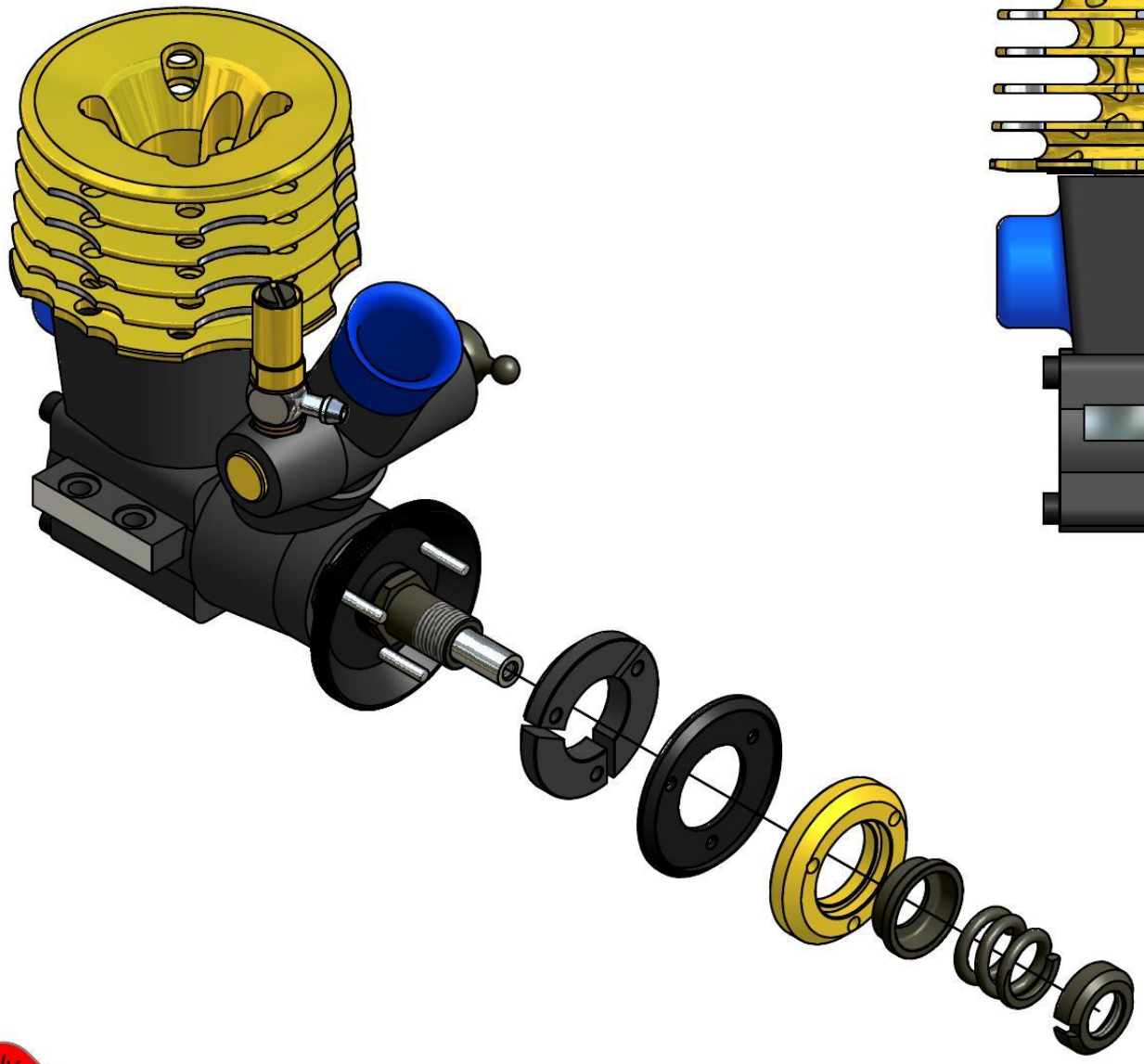

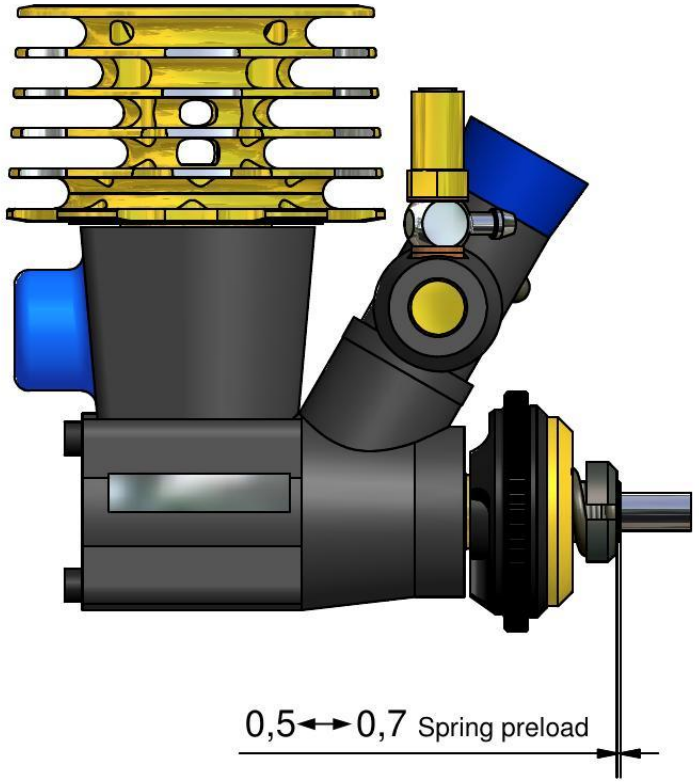

Made in Italy

- Clutch -
BAG 15

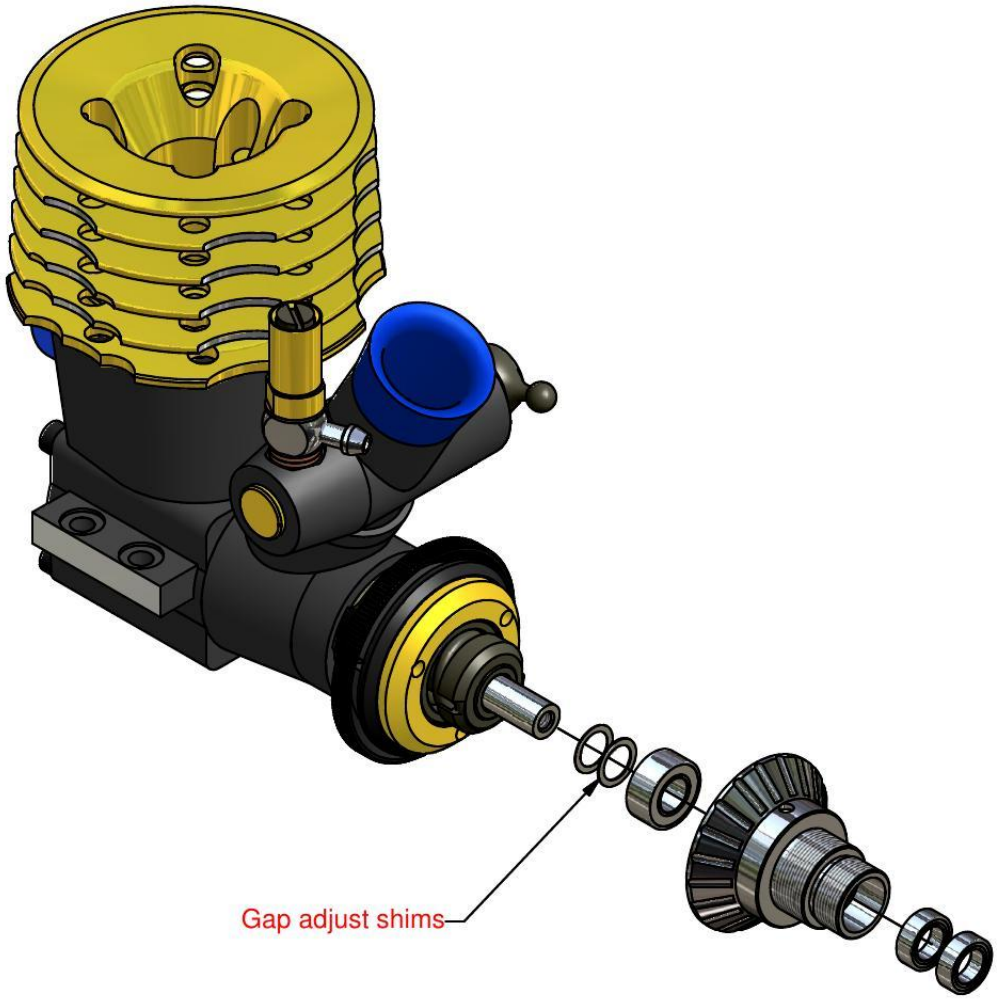

Adjusting the clutch bell gap

Gap =0

Note:
Do not install
internal shims

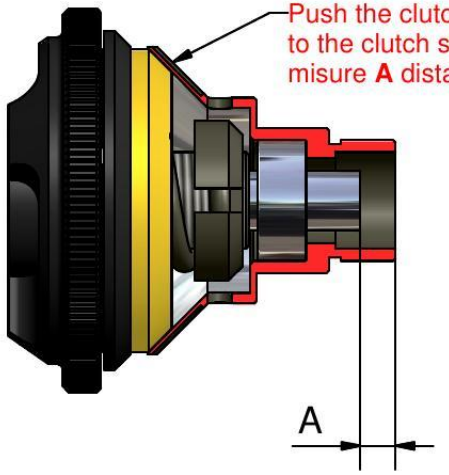

Gap =0,5

Note:
install internal
shims appropriately

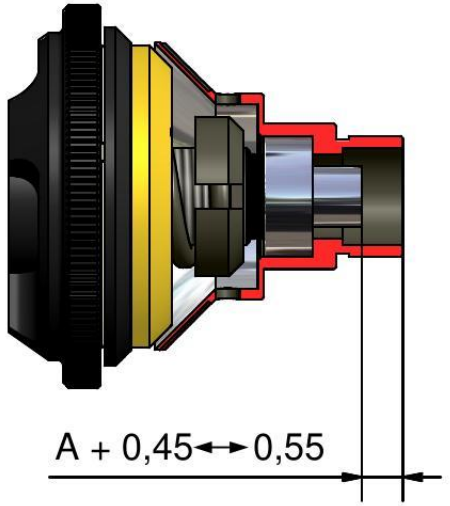

- Clutch -
BAG 15

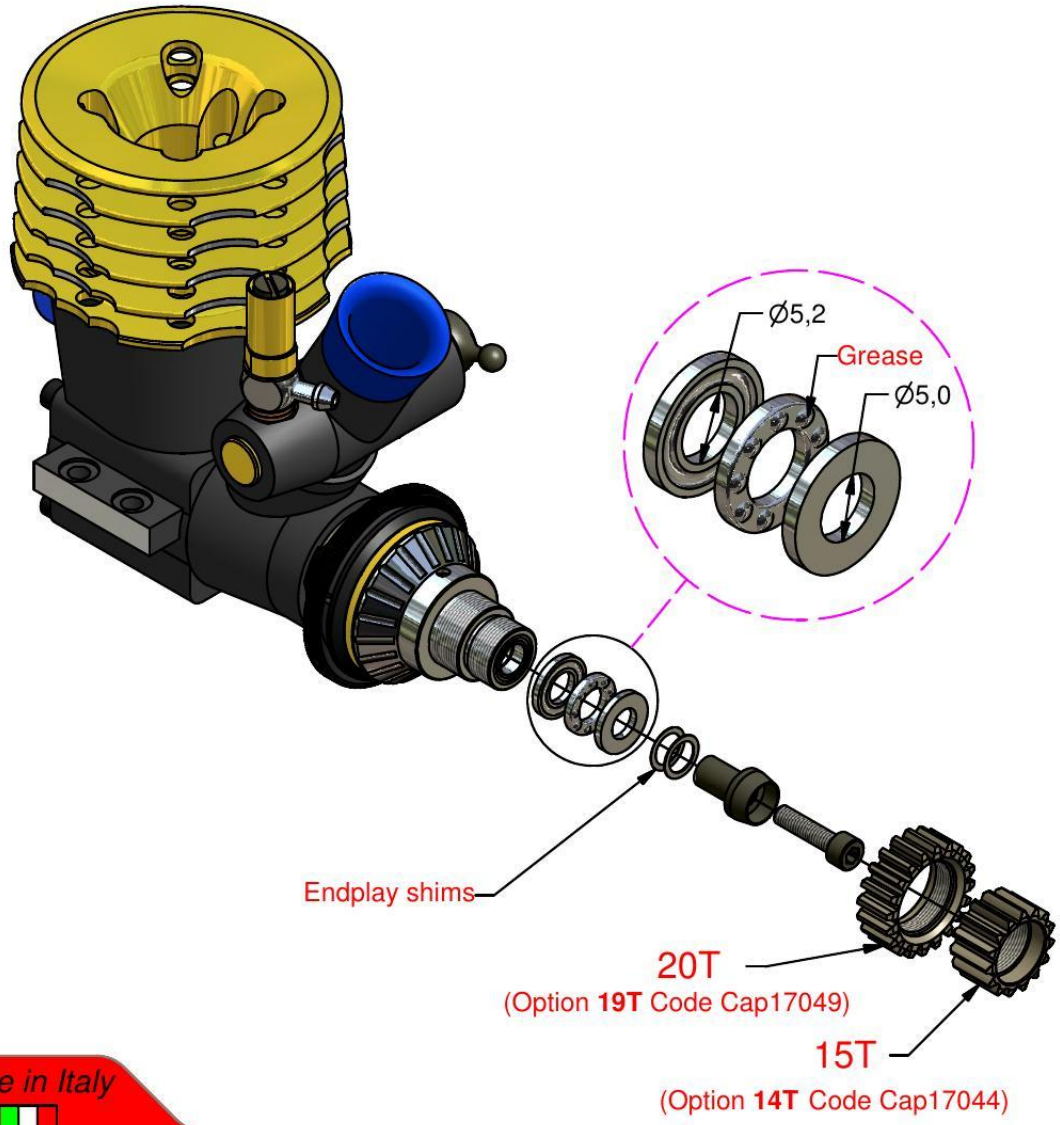

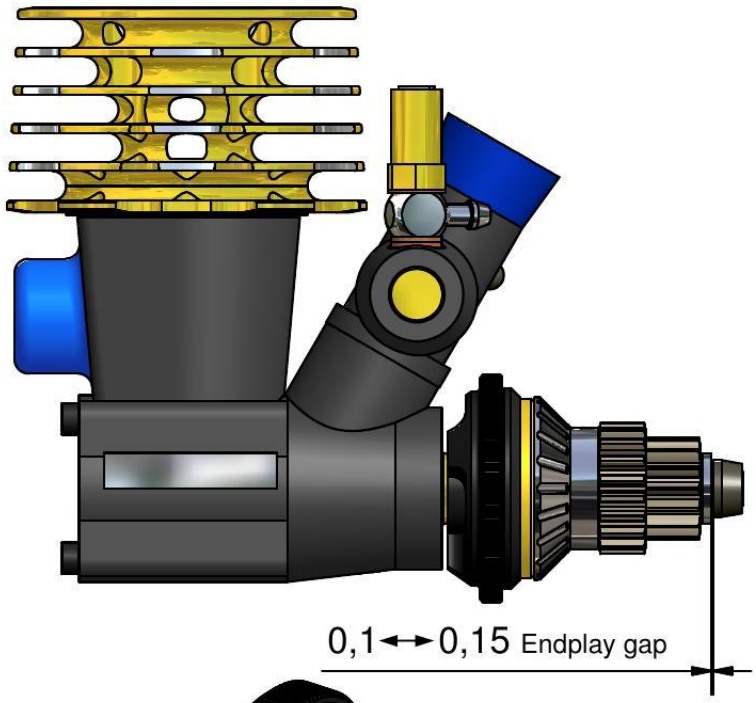

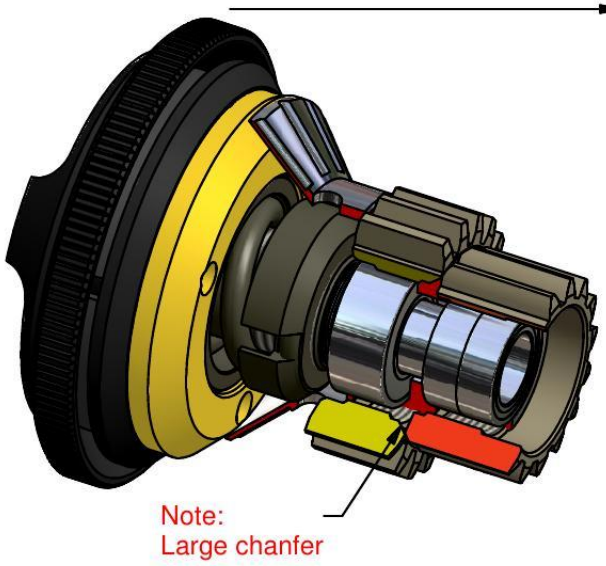

Made in Italy

C04 Default Set-Up Sheet

Capricorn RC

Front

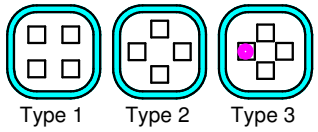

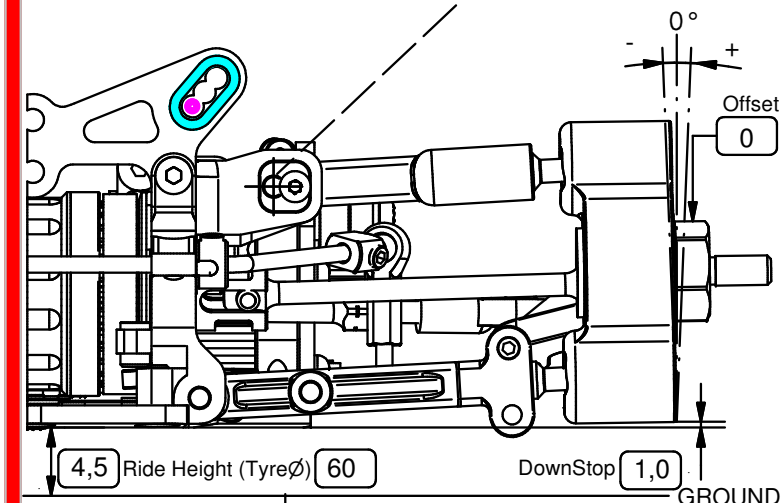

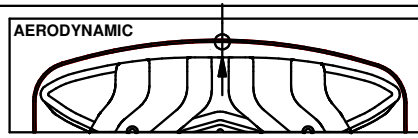

BODY TYPE	
BODY POSITION	10,0
WING TYPE	
WING POSITION	

CAMBER		TOE-OUT	WIDHT
LEFT	2°	-1,5°	198
RIGHT	2°	WHEELBASE SHIM	Front ☐ Rear ●

ACKERMANN INSERTS				GEAR DIFF. OIL
9 ☐	10 ☐	11 ●	12 ☐	300.000

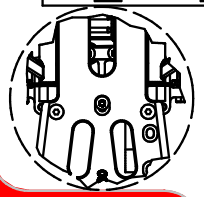

Front
Rear

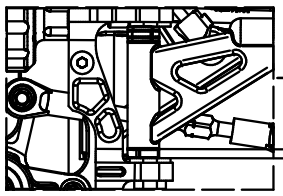

Caster Angle
Upper Arm Spacers
2,0

Made in Italy

FRONT		TYRES	REAR	
LEFT	RIGHT		LEFT	RIGHT
		BRAND		
37	37	SHORE	40	40
60	60	DIAMETER	62	62

SHOCK ABSORBERS	Std Bore ● Big Bore ☐	
600	OIL	600
Red	SPRING	Red
3	PISTON	3
1,1	HOLES Ø	1,1

ANTI-ROLL BARS		
Wire	TYPE	Wire
2,3	Ø	2,0
	F1 DEPTH	

1 ST SPUR GEAR 2 ND					
☐	●	☐	☐	●	☐
52	53	54	47	48	49

1 ST PINION 2 ND			
☐	●	☐	●
14	15	19	20

DRIVE TRAIN - REAR CVD - BRIDGE				
MIDDLE AXLE PULLEY	● 25	☐ 26	☐ CVD	● BR.

POWER PACK			
BRAND/TYPE		MANIFOLD	
PLUG	6	FUEL/NITRO %	16
CLUTCH BELL GAP	0,5	END PLAY	0,15
CLUTCH SPRING	STD	SPRING PRELOAD	0,5

SET-UP SHEET

NAME
DATE
TEMP
TRACK
TRACTION
RESULT
BEST LAP

Rear

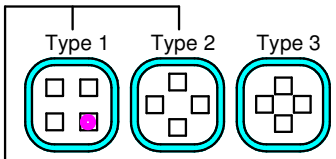

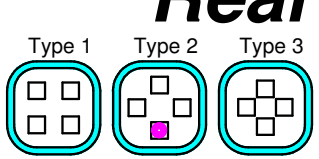

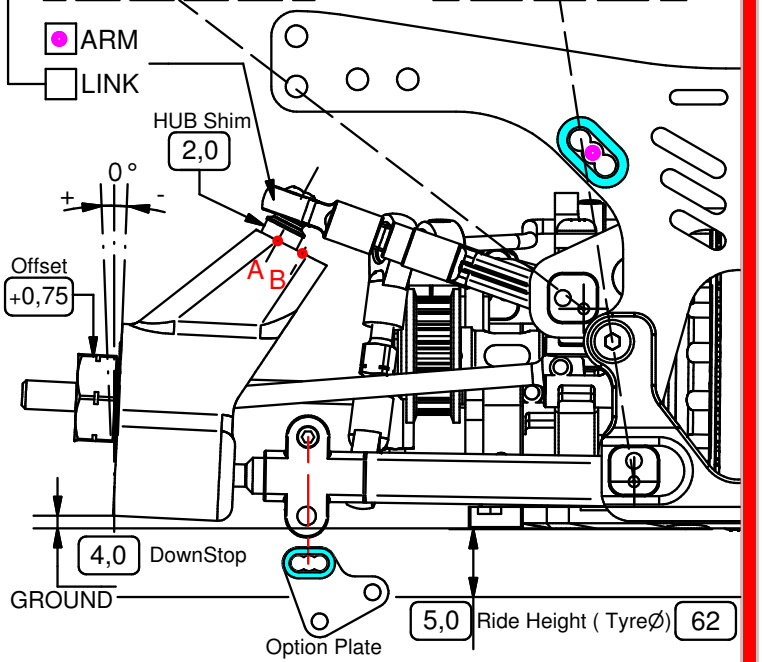

CAMBER		TOE-IN	WIDHT
LEFT	3,5°	2,5°	199
RIGHT	3,5°	ARM POSITION	● A ☐ B

REAR GEAR DIFF.TYPE		GEAR DIFF. OIL
ALU CASE ☐	METAL GEAR ●	80.000

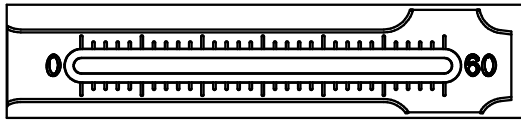

WEIGHTS
0 gr.

Additional notes

C04 Blank Set-Up Sheet

Capricorn RC

Front

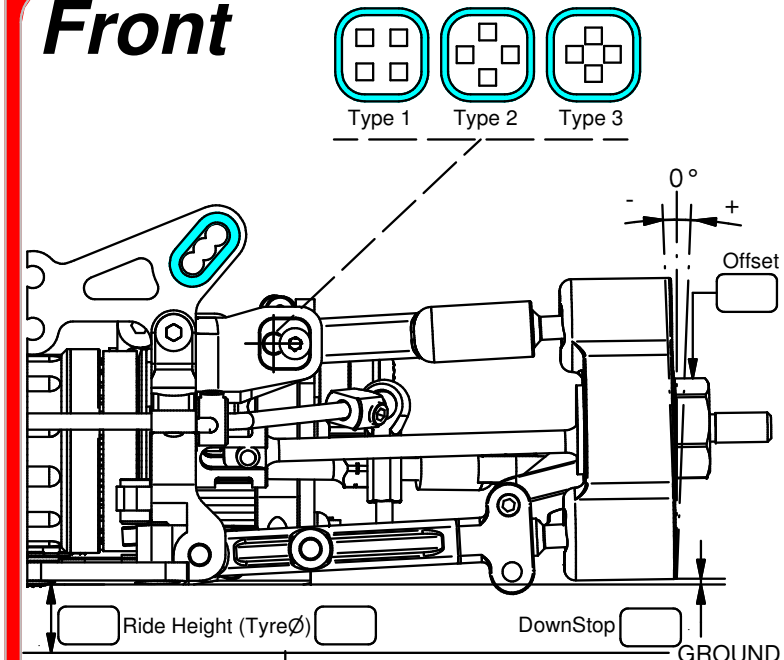

AERODYNAMIC	
BODY TYPE	
BODY POSITION	
WING TYPE	
WING POSITION	

CAMBER	TOE-OUT	WIDHT
LEFT		
RIGHT	WHEELBASE SHIM Front ☐ Rear ☐	

ACKERMANN INSERTS	GEAR DIFF. OIL
9 ☐ 10 ☐ 11 ☐ 12 ☐	

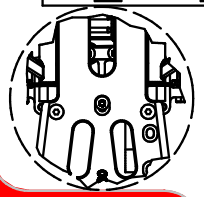

Front
8
Rear

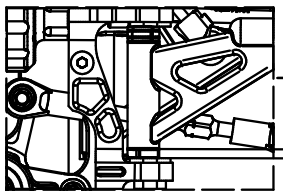

Caster Angle
Upper Arm Spacers ☐

Made in Italy

FRONT		TYRES	REAR	
LEFT	RIGHT		LEFT	RIGHT
		BRAND		
		SHORE		
		DIAMETER		

SHOCK ABSORBERS	Std Bore ☐ Big Bore ☐	
	OIL	
	SPRING	
	PISTON	
	HOLES Ø	

ANTI-ROLL BARS		
	TYPE	
	Ø	
	F1 DEPTH	

1 ST SPUR GEAR 2 ND					
☐	☐	☐	☐	☐	☐
52	53	54	47	48	49

1 ST PINION 2 ND			
☐	☐	☐	☐
14	15	19	20

DRIVE TRAIN - REAR CVD - BRIDGE				
MIDDLE AXLE PULLEY	☐ 25	☐ 26	☐ CVD	☐ BR.

POWER PACK	
BRAND/TYPE	MANIFOLD
PLUG	FUEL/NITRO %
CLUTCH BELL GAP	END PLAY
CLUTCH SPRING	SPRING PRELOAD

SET-UP SHEET	
NAME	
DATE	
TEMP	
TRACK	
TRACTION	
RESULT	BEST LAP

Rear

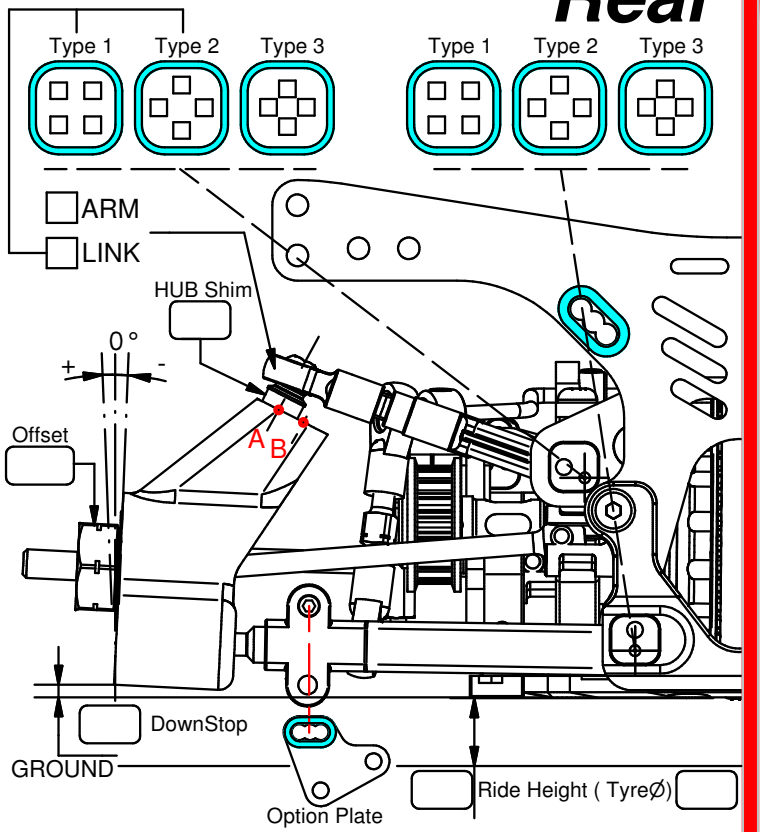

CAMBER	TOE-IN	WIDHT
LEFT		
RIGHT	ARM POSITION	☐A ☐B

REAR GEAR DIFF.TYPE	GEAR DIFF. OIL
ALU CASE ☐ METAL GEAR ☐	

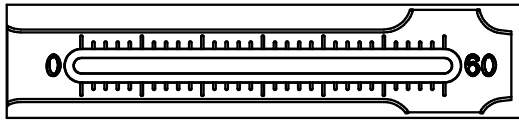

WEIGHTS ☐ gr.

Additional notes

- OPTION PARTS -

Capricorn RC



cod. Cap16008-1,8
cod. Cap16008-2,0
cod. Cap16008-2,2
cod. Cap16008-2,3
cod. Cap16008-2,4

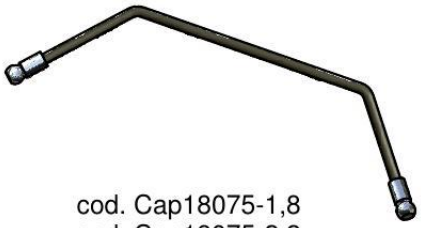

cod. Cap18075-1,8
cod. Cap18075-2,2
cod. Cap18075-2,3
cod. Cap18075-2,4



cod. Cap18012-K Kit
Inserts:
cod. Cap18014-0,8
cod. Cap18014-0,9
cod. Cap18014-1,0
cod. Cap18014-1,1



cod. Cap17057-K



cod. Cap18097-K

cod. Cap18027

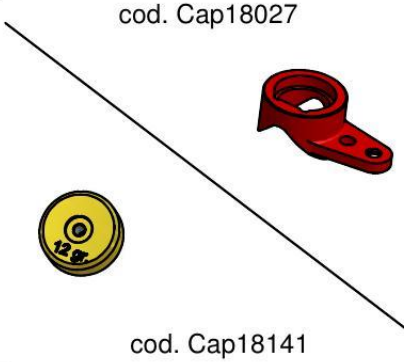

cod. Cap18141

cod. Cap18072-K

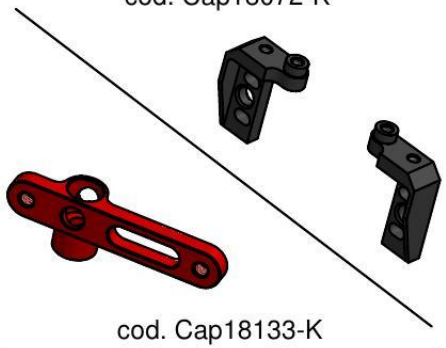

cod. Cap18133-K

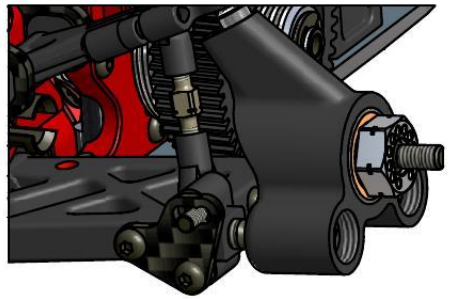

cod. Cap18224

cod. Cap18208-K

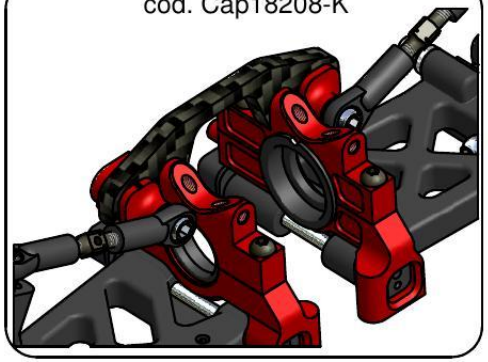

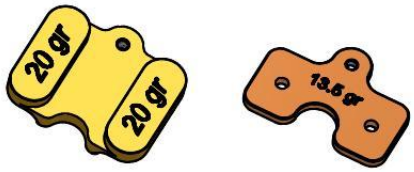

Brass
20,0gr Code Cap18221
Special alloy
13,5gr Code Cap18162-13,5
27,0gr Code Cap18162-27

cod. Cap18065-K

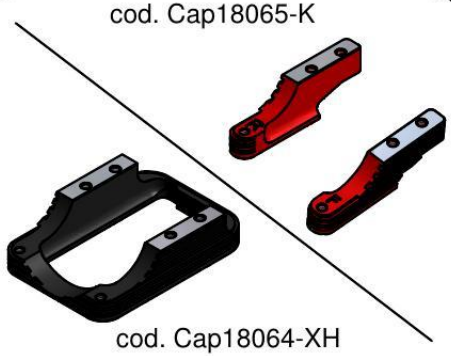

cod. Cap18064-XH

cod. Cap16059M

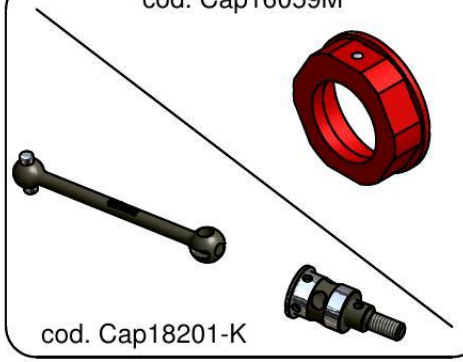

cod. Cap18201-K

Made in Italy

Capricorn RC

- Final Assembly View -

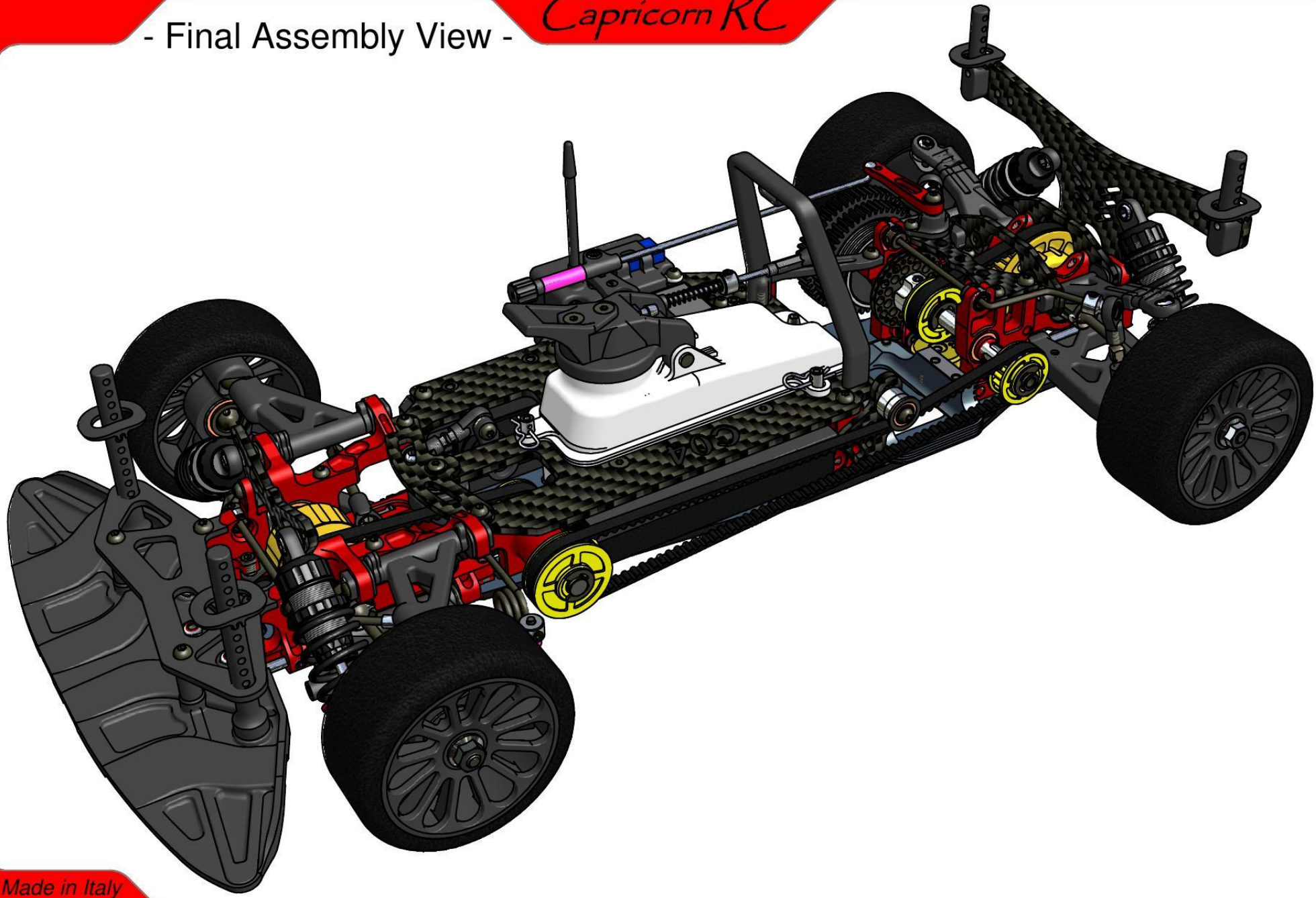

Made in Italy

- Final Assembly View -

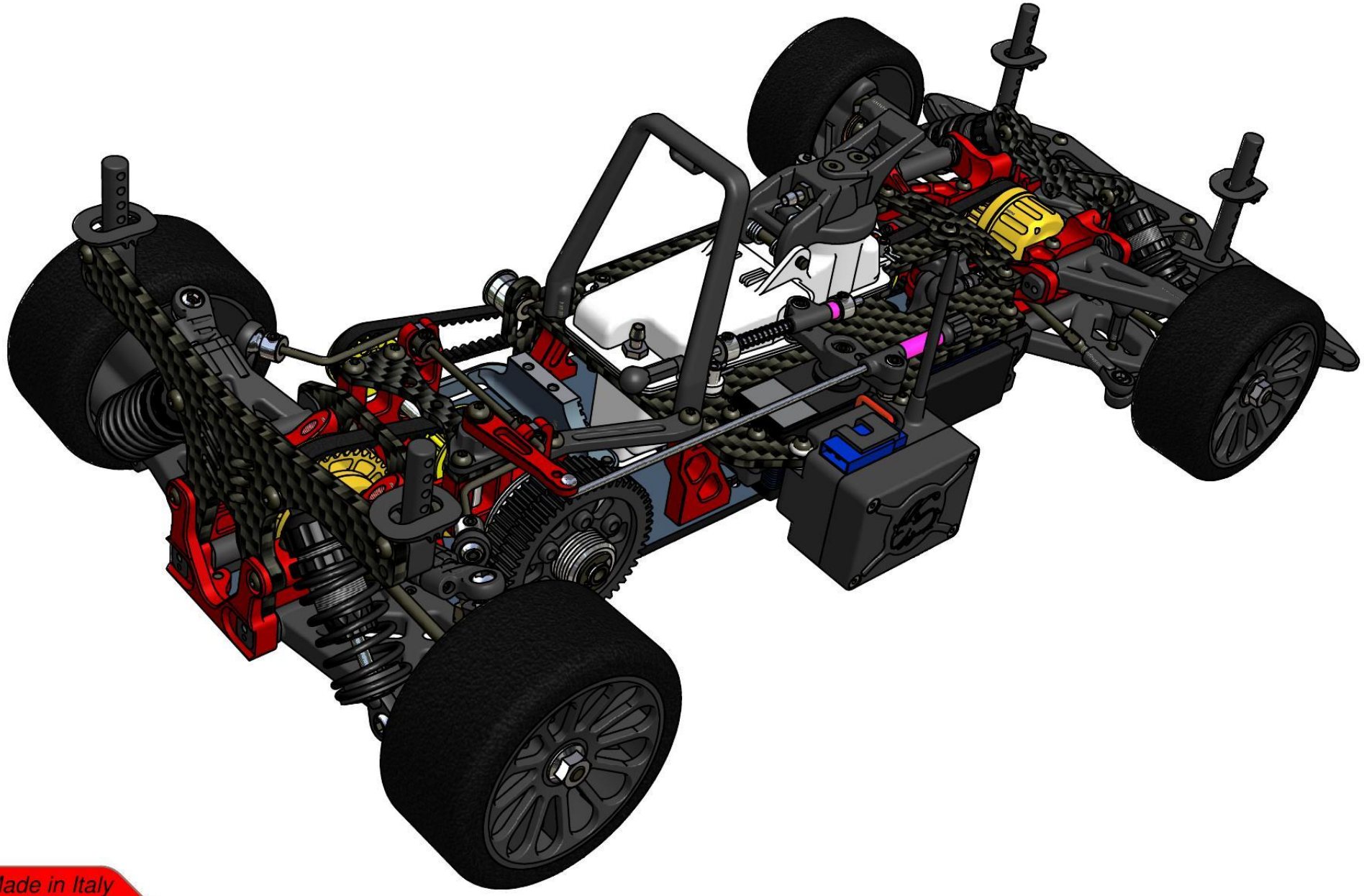

Made in Italy

- Final Assembly View -

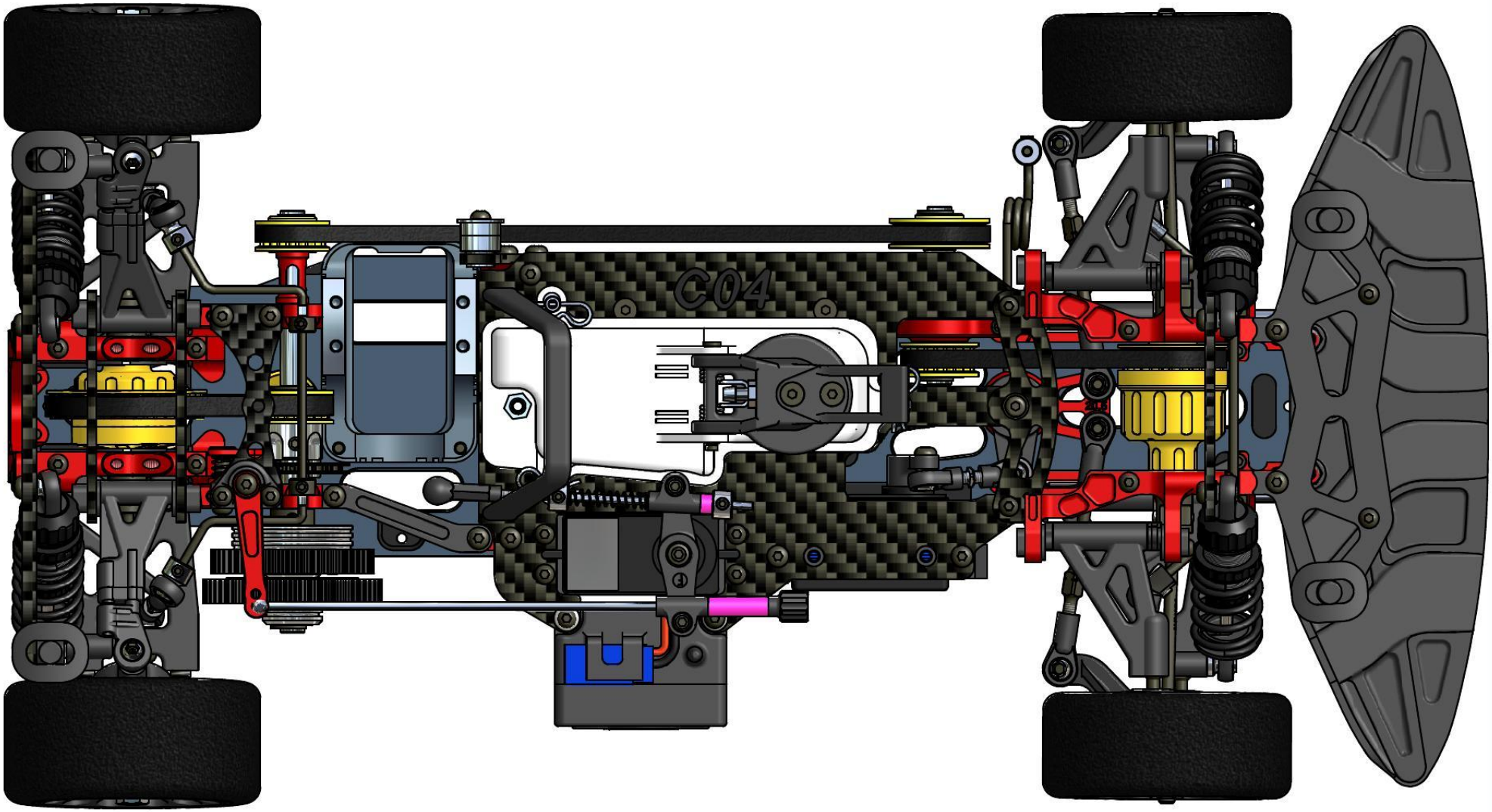

Made in Italy

- Final Assembly View -

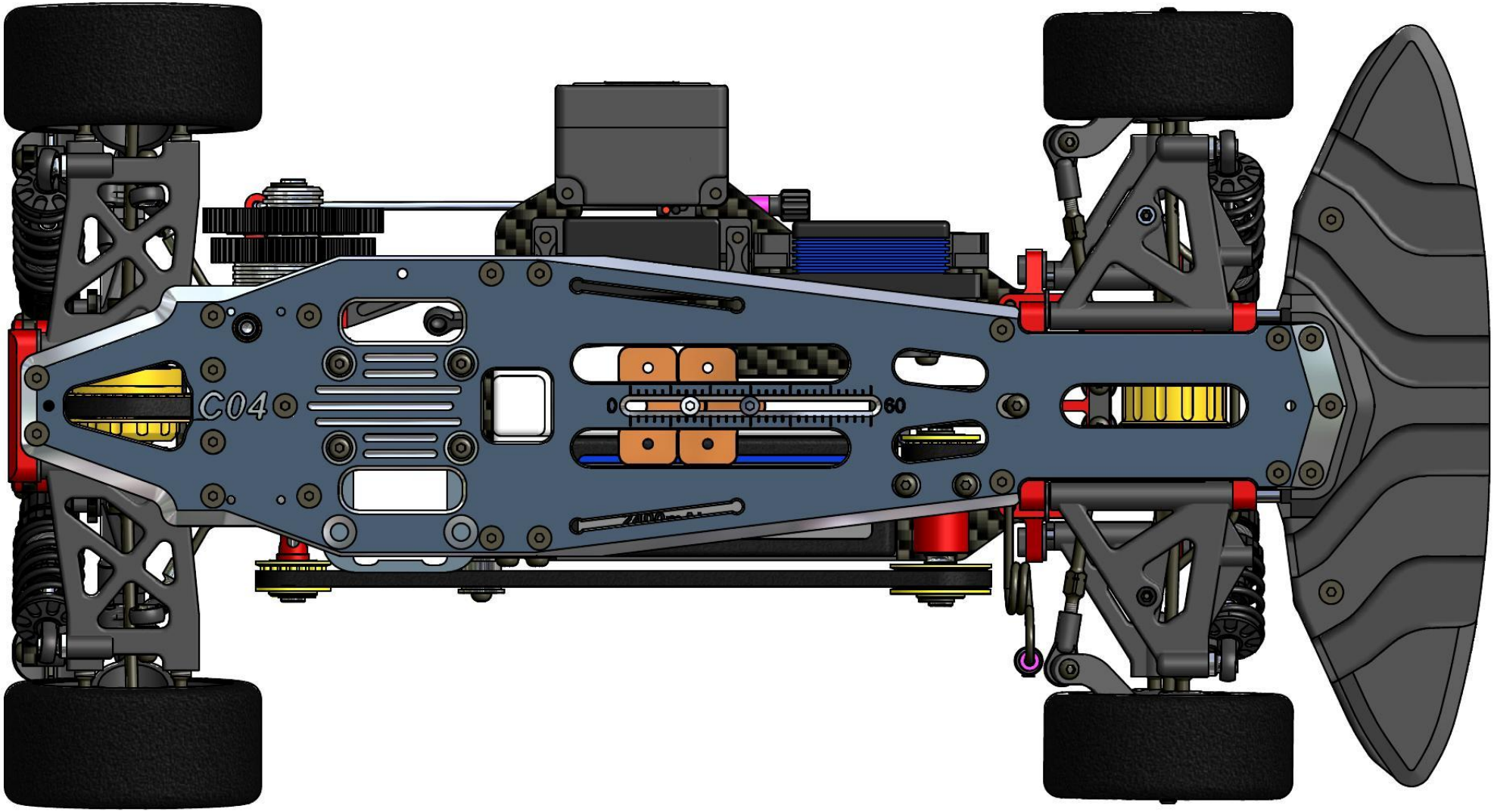

Made in Italy

- Notes -

Step 16.0

Capricorn RC

- WIDE CONVERSION -

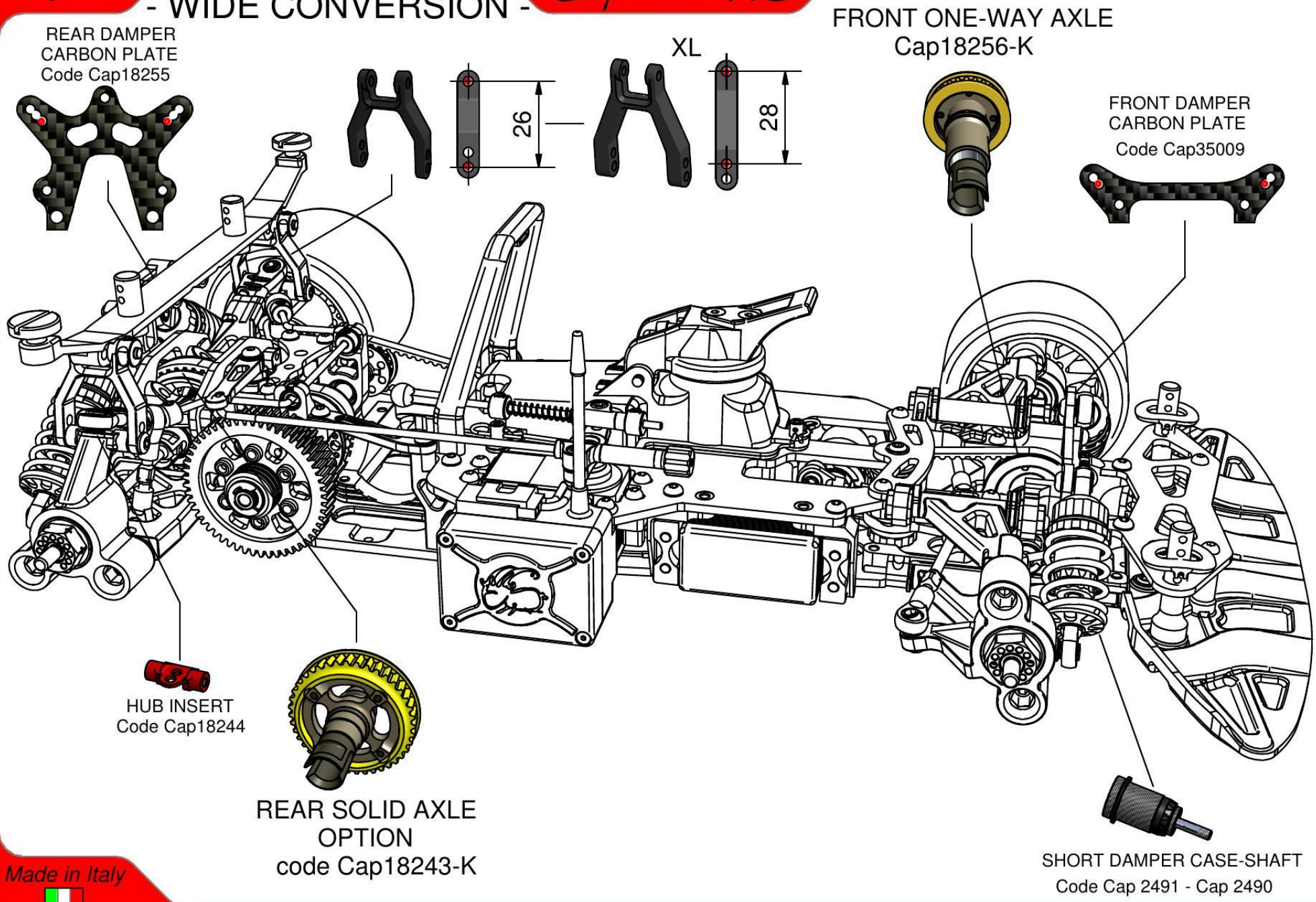

Made in Italy

Capricorn RC

Parts List		
Rif.	n°	Code
1	1	Cap18250
2	2	Cap 599
3	2	Cap18253
4	2	Cap17030
5	2	Cap18249
6	1	Cap18254
7	2	Cap18024
8	2	Cap18251
8/A	2	Cap18252
9	2	Cap18246
10	2	Cap 2605
11	2	Cap17006
12	4	Cap18245
12/A	4	Cap18248
13	1	Cap18247
14	1	Cap17032
15	1	Cap18224

