Instruction Manual



QUANTUM

V1.2

DISCLAIMER

This radio control model is not toy.

First time builders should seek the advice of experienced modellers before beginning assembly and/or if they do not fully understand any part of the construction.

We highly advise to read the instruction manual before assembly, and to always keep it at hand for reference.

Take care before operating this model; you are responsible for its assembly and safe operation.

The extreme performance of this model could be understimated by inexpert drivers and could damage objects and/or people.

Assembly this kit only in places out of children's reach!

CAPRICORN RC is not responsible for any damage or harm caused by improper use or assembly.

CAPRICORN RC and its distribution network are not responsible for any damage caused by shipping or handling.

Eventual parts missing from the kit or flawed must be reported within two weeks of purchase to your local hobby shop or distributor.

For best performance, we highly advise to only use original authentic CAPRICORN RC parts.

For customer support and service please contact your local hobby shop or agent from whom you purchased this item.

Contents of box may slightly differ from the pictures shown.

TOOLS REQUIRED
(NOT INCLUDED)

- Hex wrench 1,5 mm
- Hex wrench 2 mm
- Hex wrench 2,5 mm
- Hex wrench 3 mm
- Box driver 7 mm
- Body Reamer
- Sharp Hobby Knife
- Needle Nose pliers
- Snap Ring Plier
- Double Side Tape
- Scissors
- Clutch Spring Tool
- Caliper
- Glass Tape
- Spray Color (for Body Shell)
- Grease & oil
- Seeger ring pliers 3-10 mm

ITEMS REQUIRED FOR OPERATION
(NOT INCLUDED)

- 2ch with 2 servo radio set with TX Battery
- RX Battery (30mmx85mmx17mm)
- .21 Rear Exhaust engine
- Muffler & Manifold
- 1/8 GP Body Shell
- Fuel
- Fuel Bottle
- Air Filter + Air Box
- Glow Plug Igniter
- Starter Box + Battery
- Plug Wrenches
- Tire for 1/8 GP Racing car

BAG A - STEP 1.0

Shock Absorbers

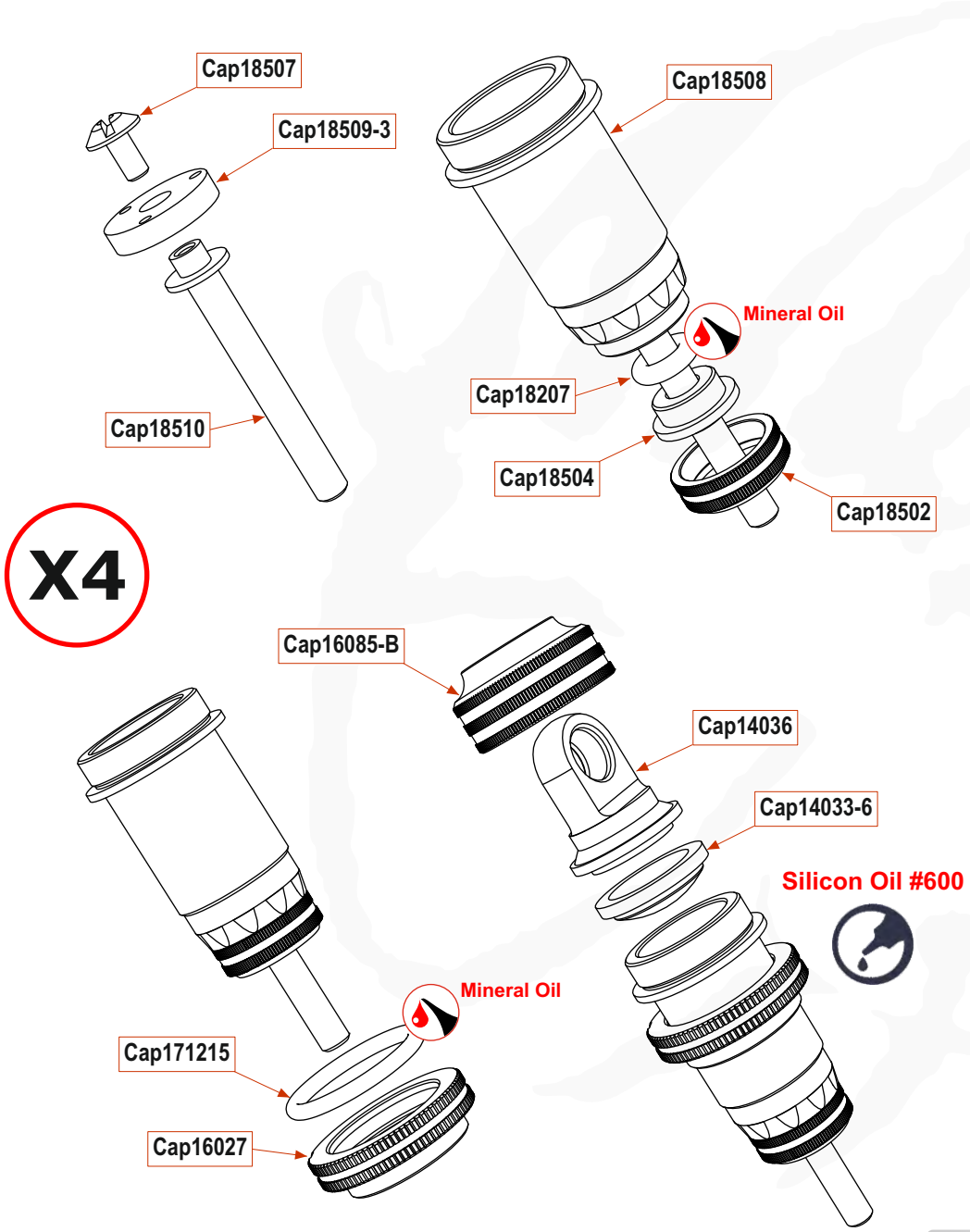

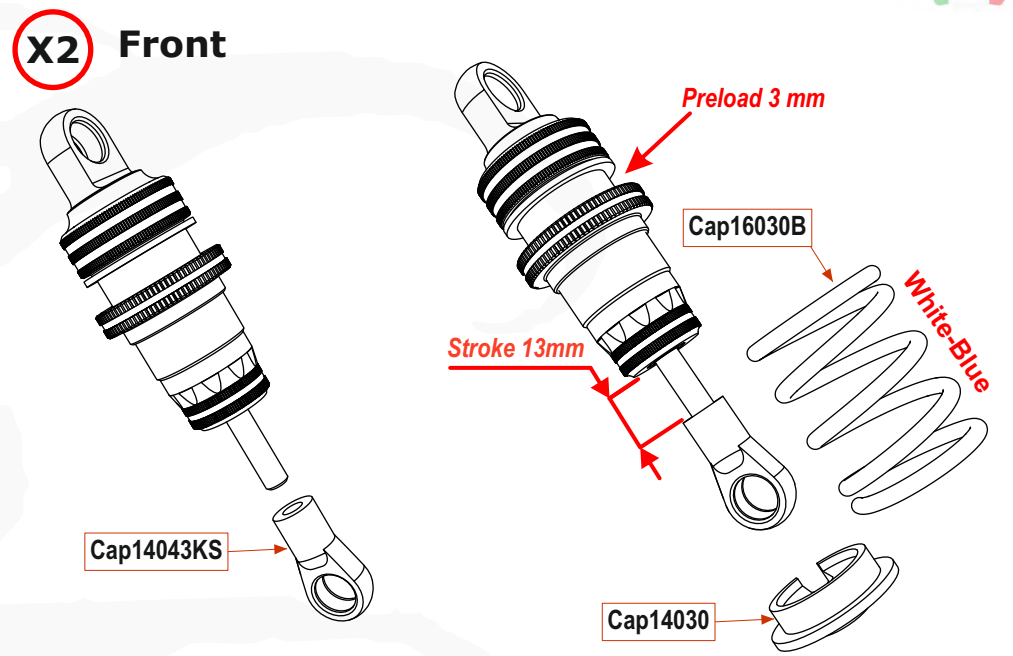

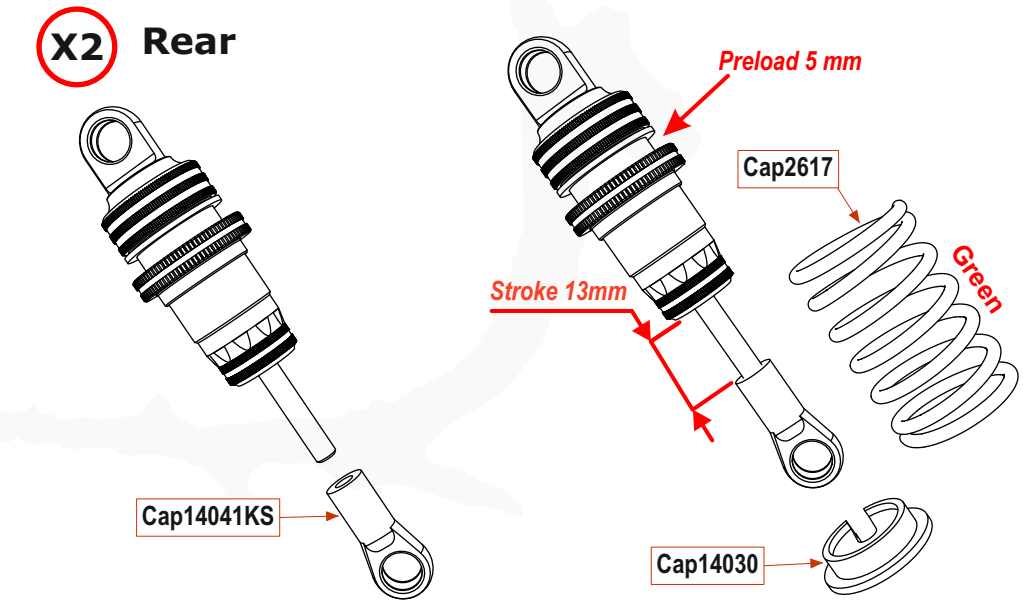

BAG B - STEP 2.0

Wishbones (Front L+R)

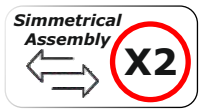

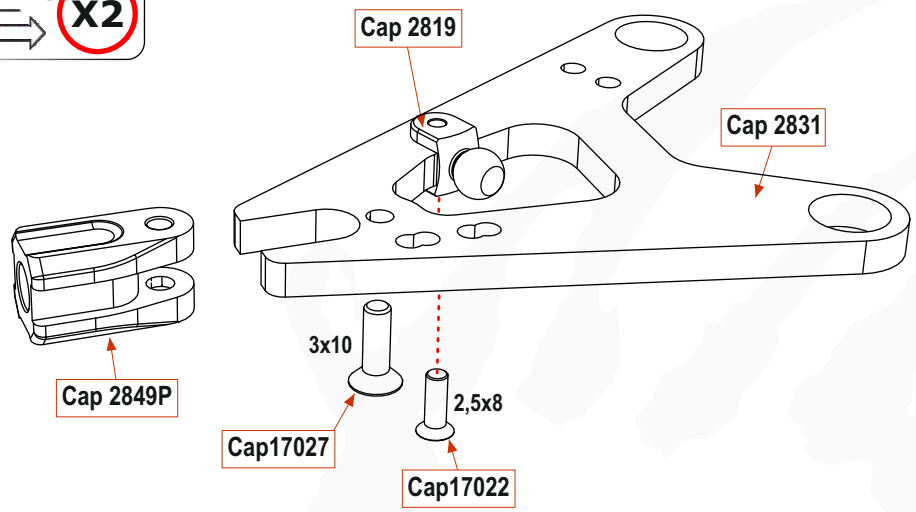

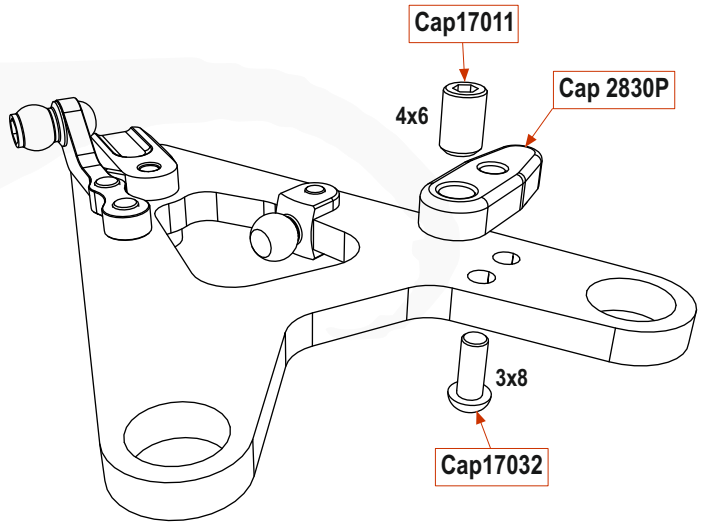

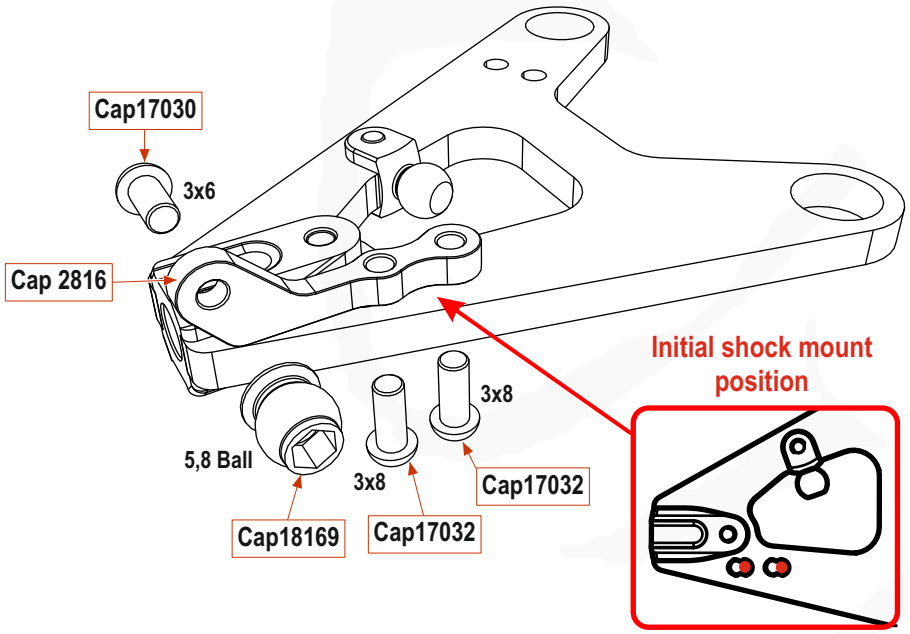

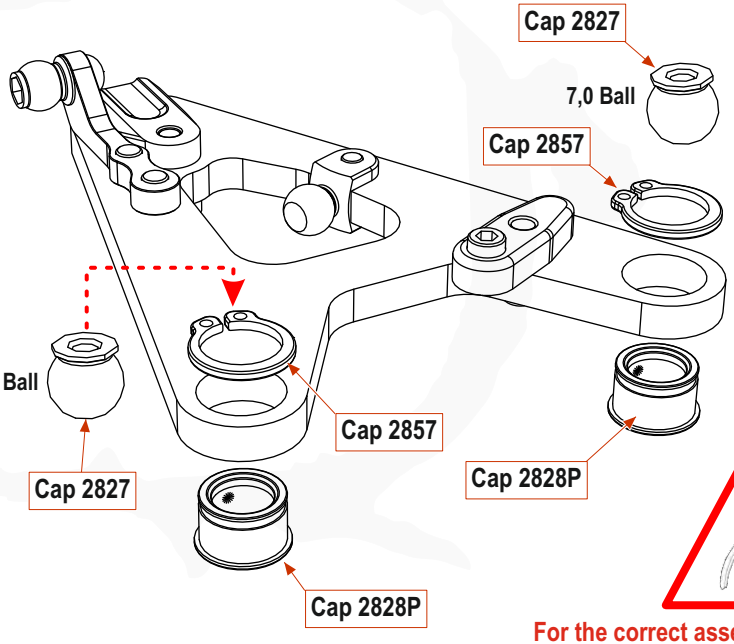

Seeger arm Position

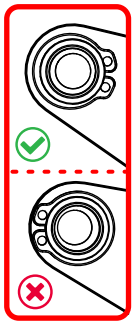

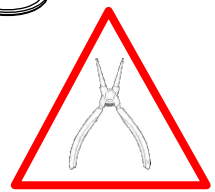

For the correct assembly of the seeger, must be use the seeger ring pliers 3~10 mm

BAG B - STEP 2.1

Wishbones (Rear L+R)

Simmetrical Assembly X2

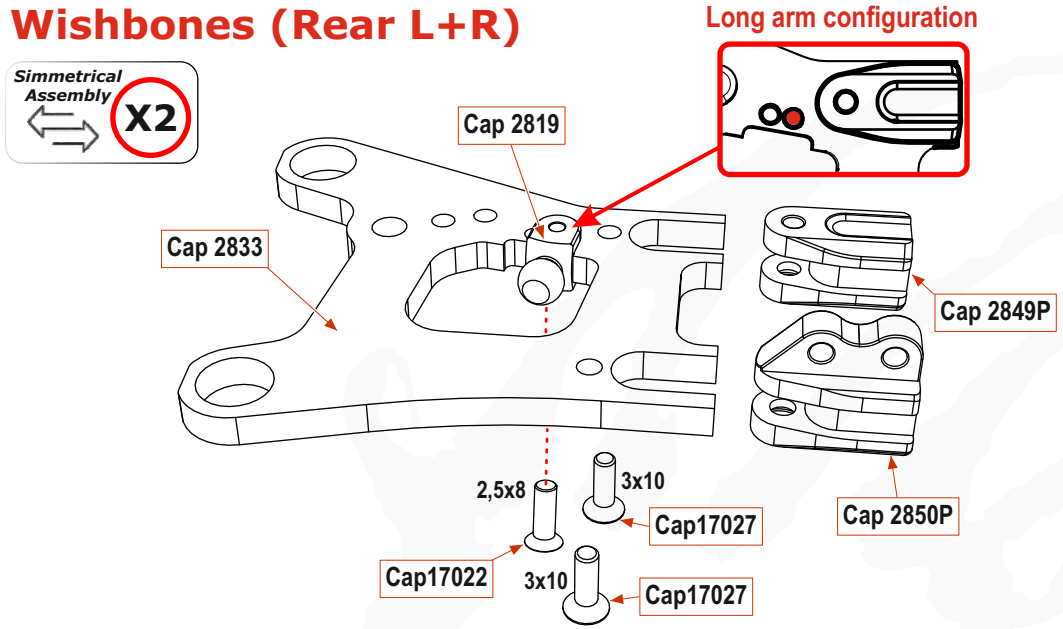

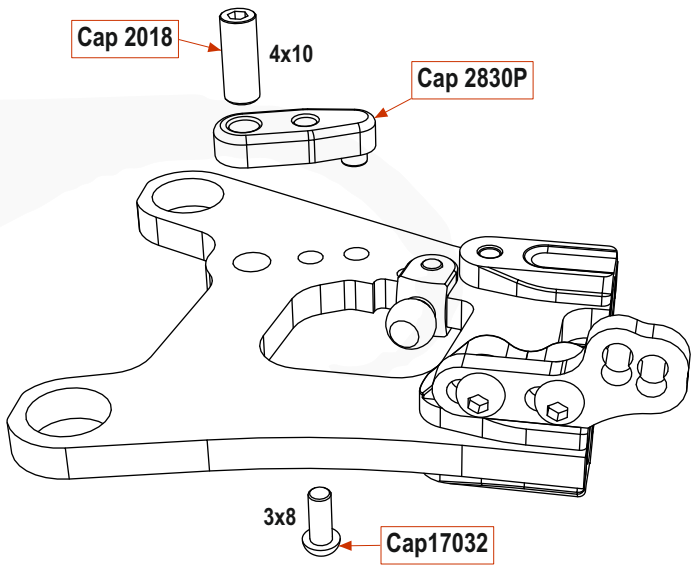

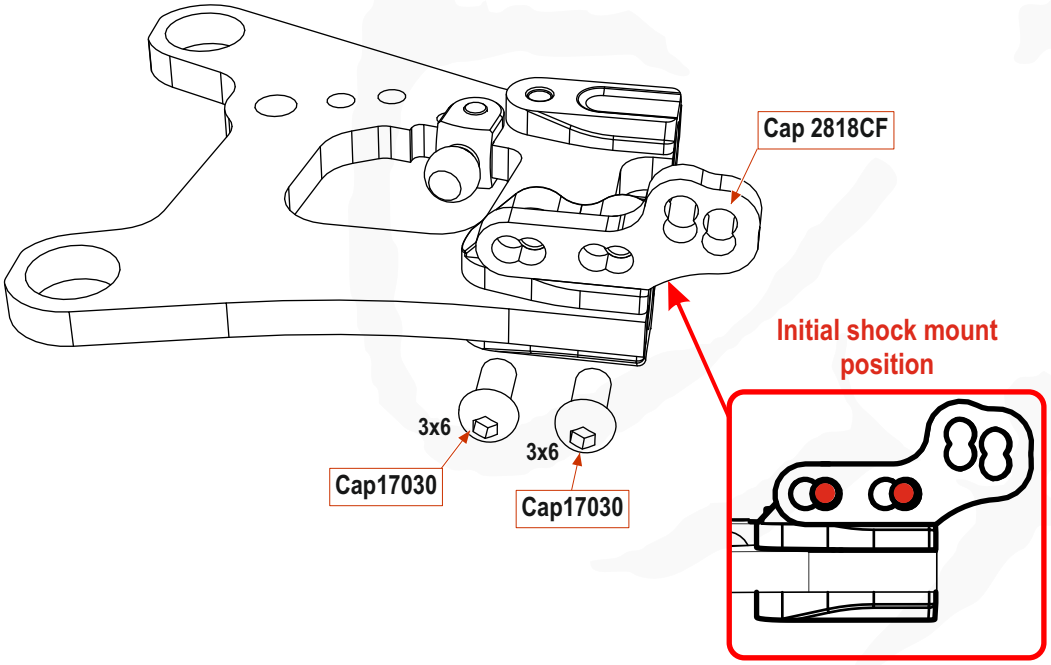

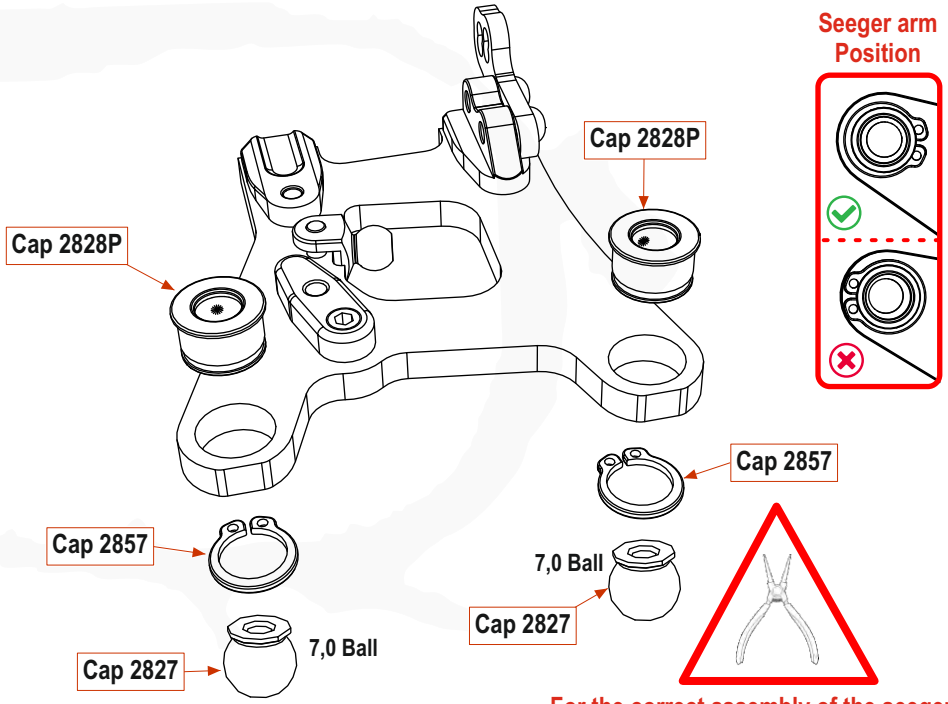

BAG B - STEP 2.2

Wishbones (Upper Front L+R)

Simmetrical Assembly X2

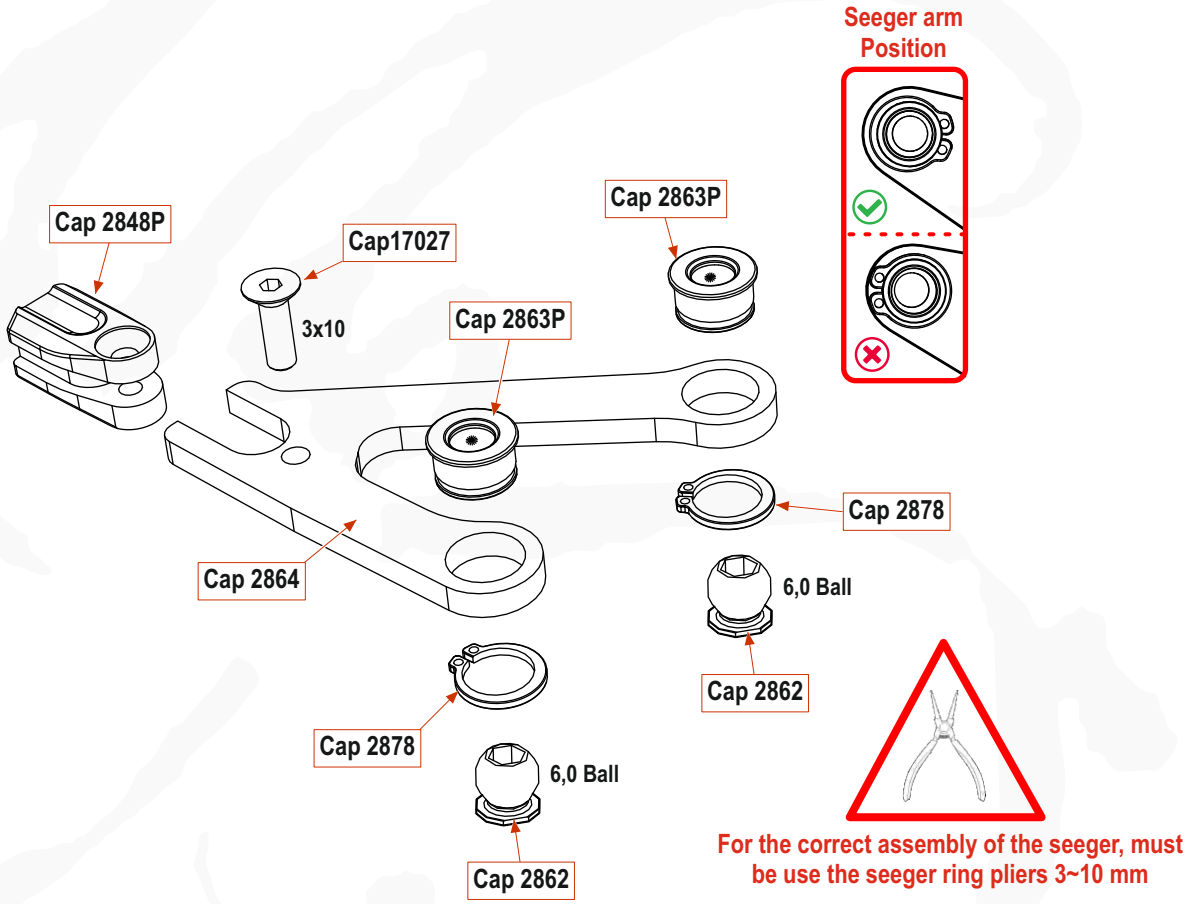

BAG C - STEP 3.0

Uprights (Front R+L)

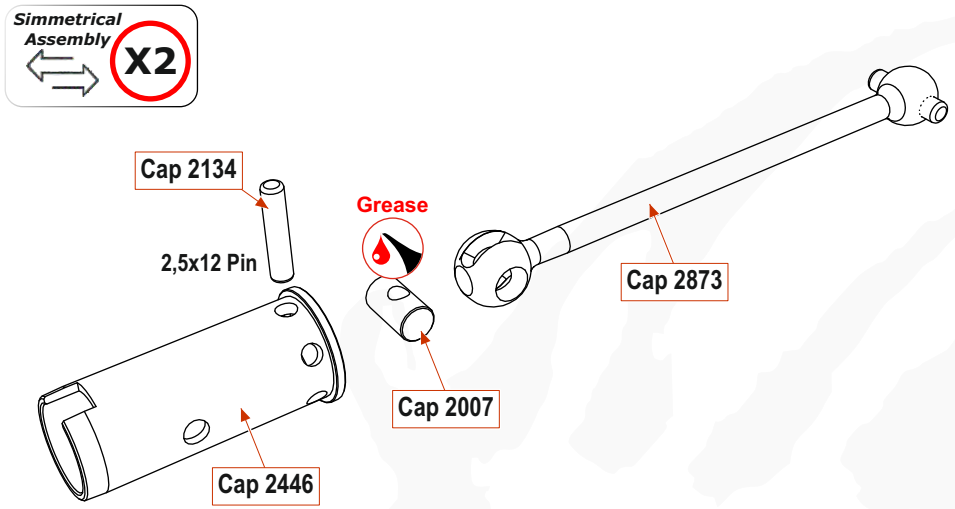

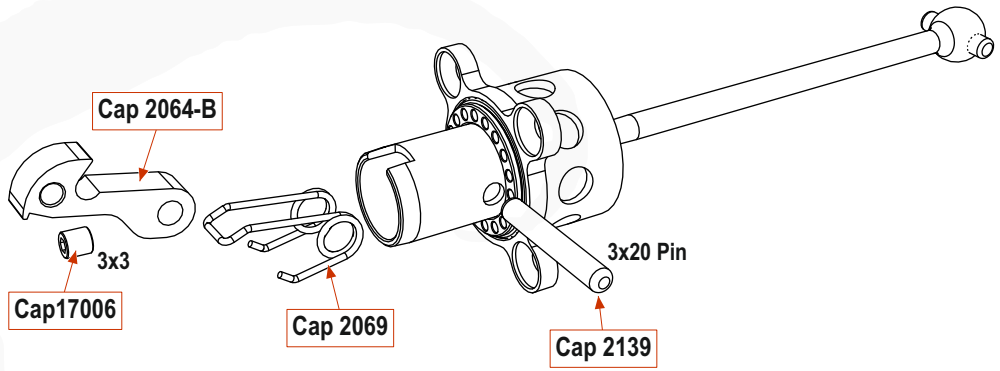

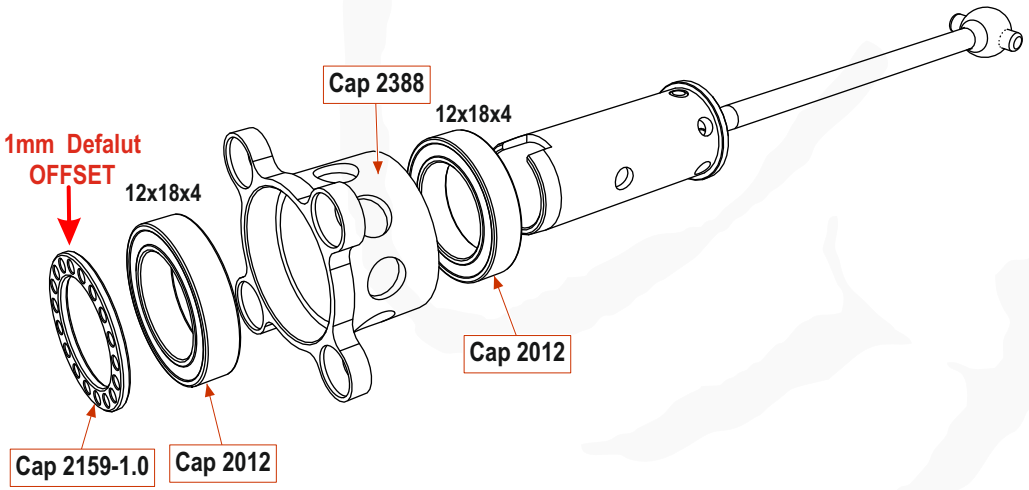

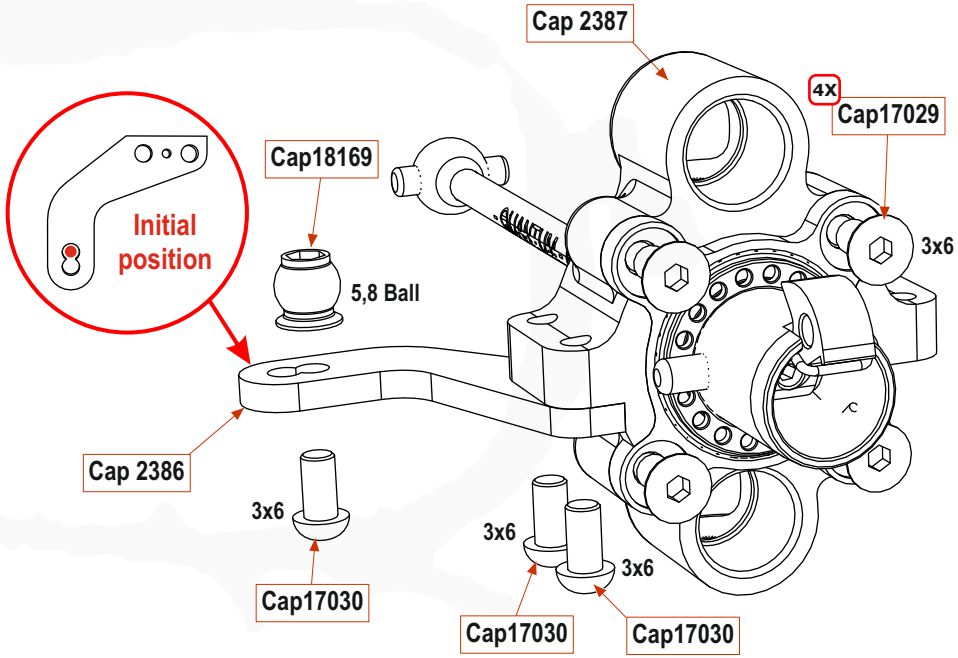

BAG C - STEP 3.1

Uprights (Front R+L)

Simmetrical Assembly X2

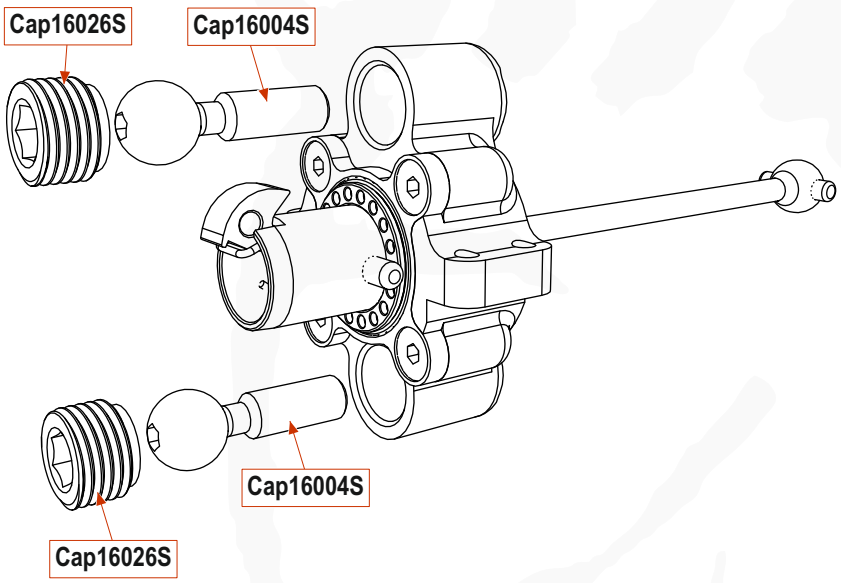

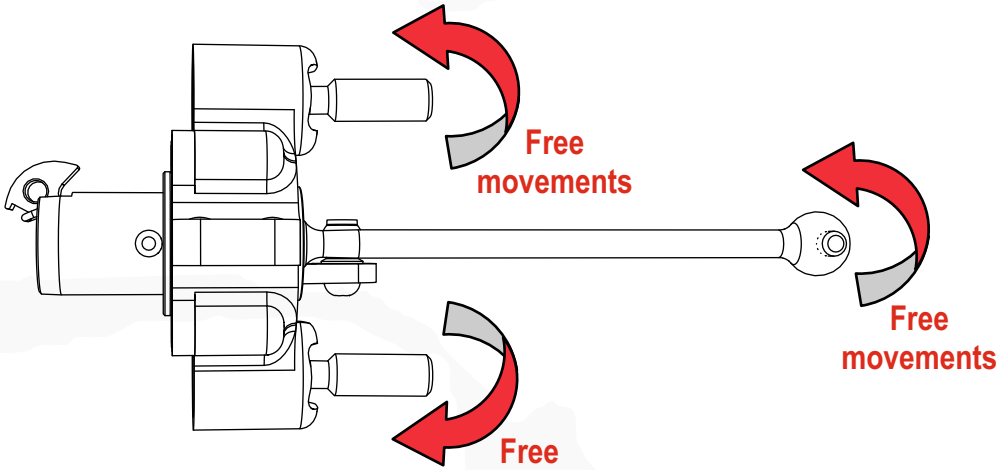

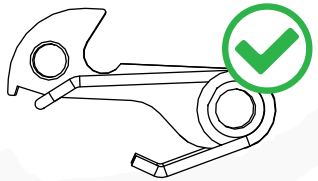

Correct Position

BAG C - STEP 3.2

Uprights (Rear R+L)

Simmetrical Assembly X2

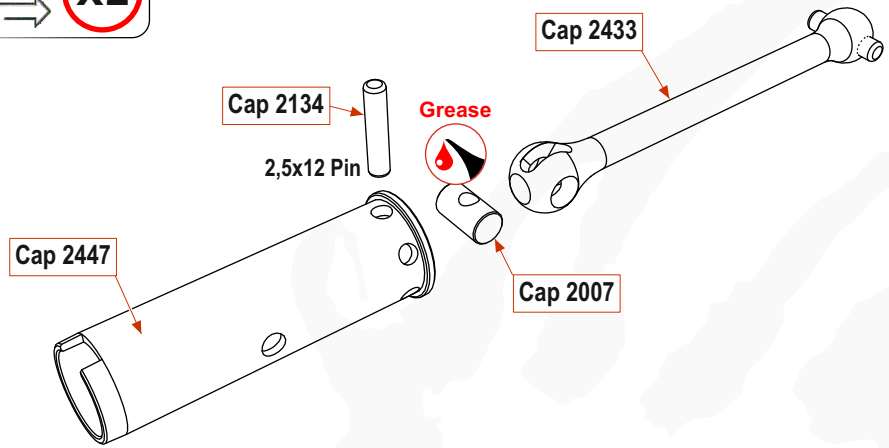

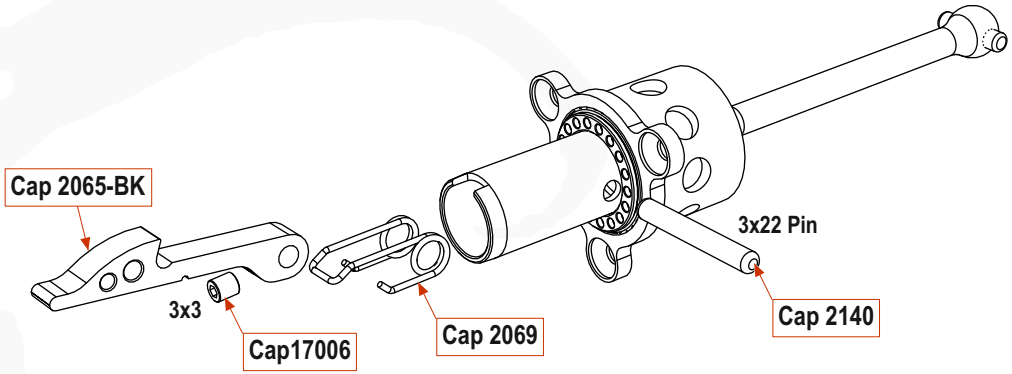

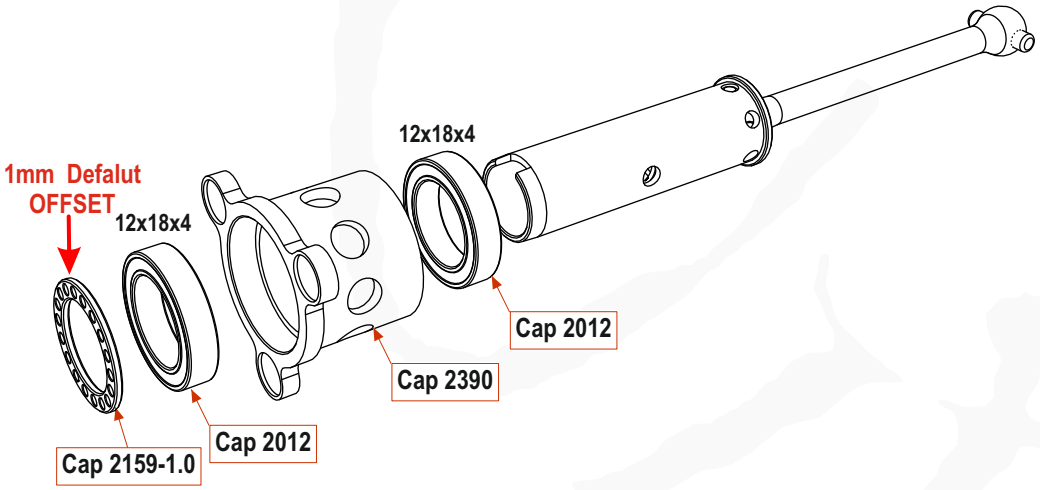

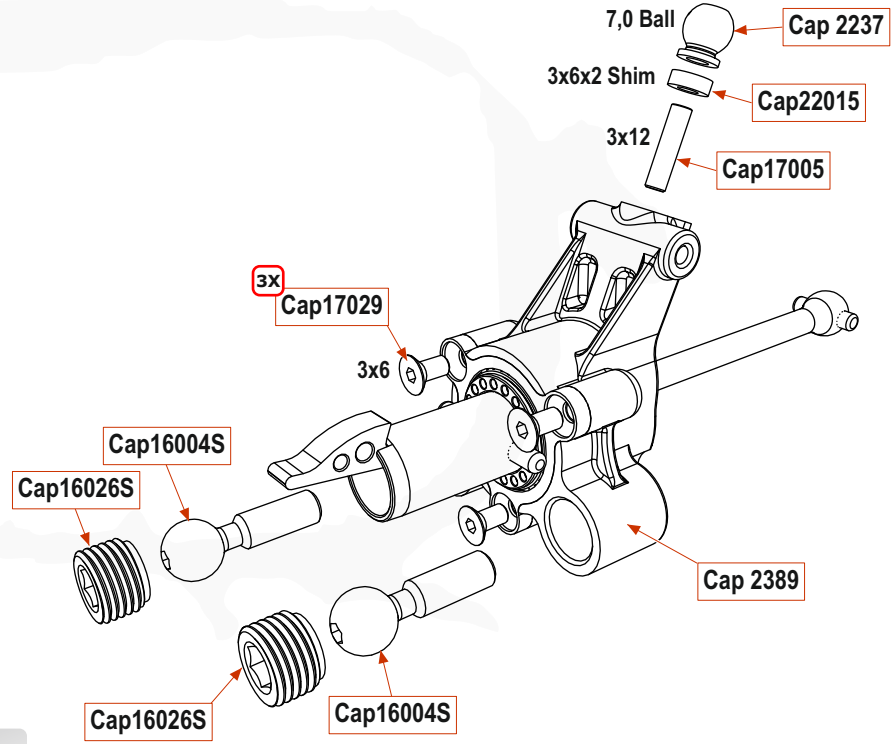

Uprights (Rear R+L)

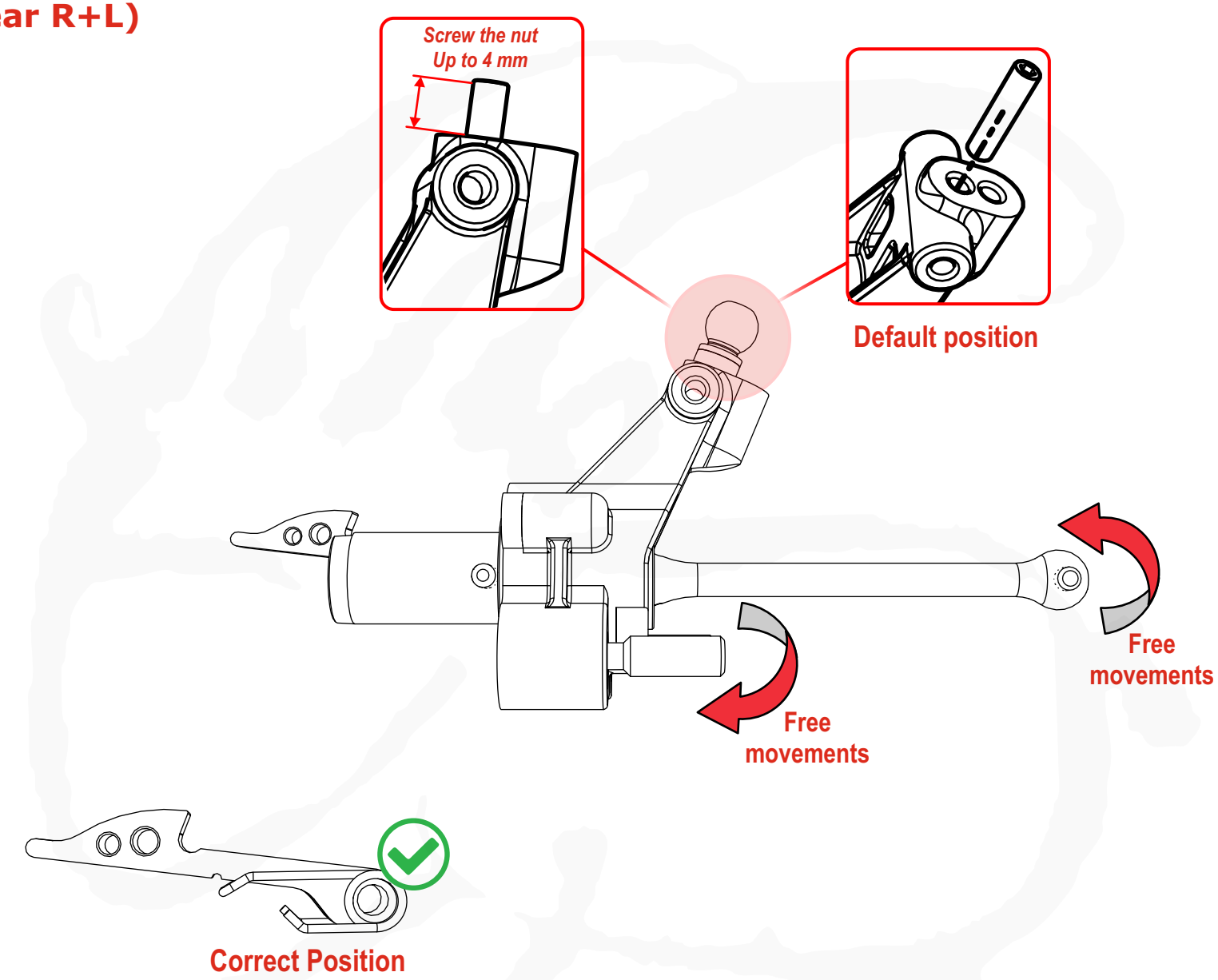

BAG D - STEP 4.0

Steering System

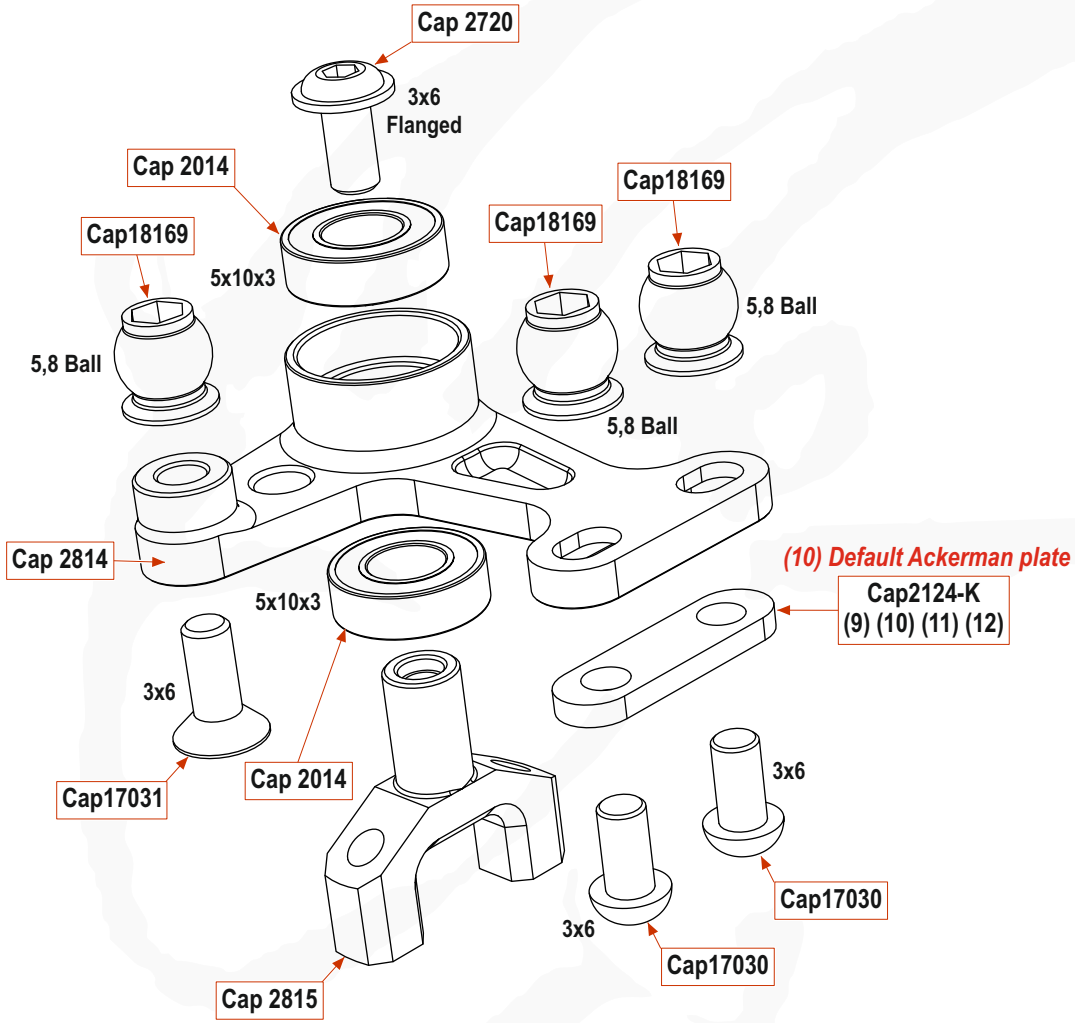

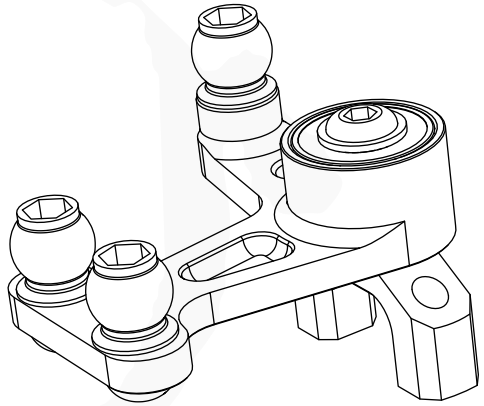

Front Axle

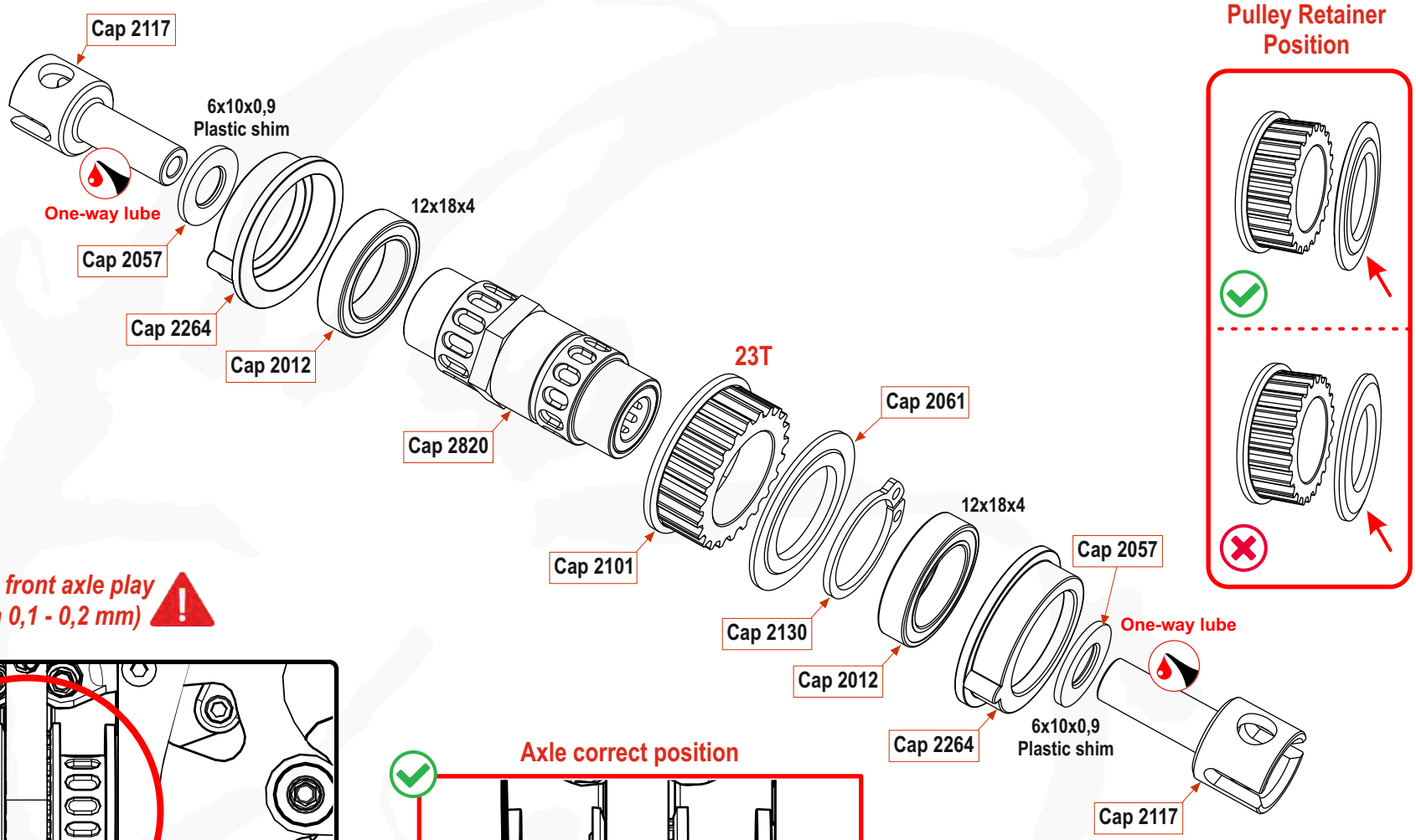

Pulley Retainer Position

Check the front axle play (between 0,1 - 0,2 mm)

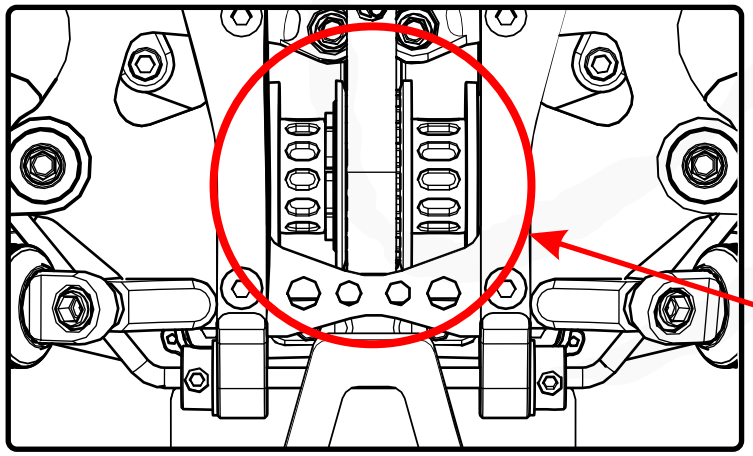

Axle correct position

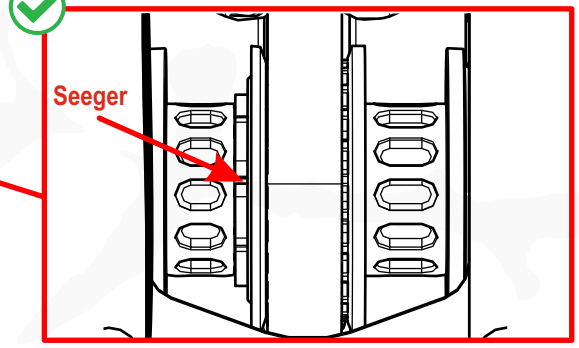

Rear Axle

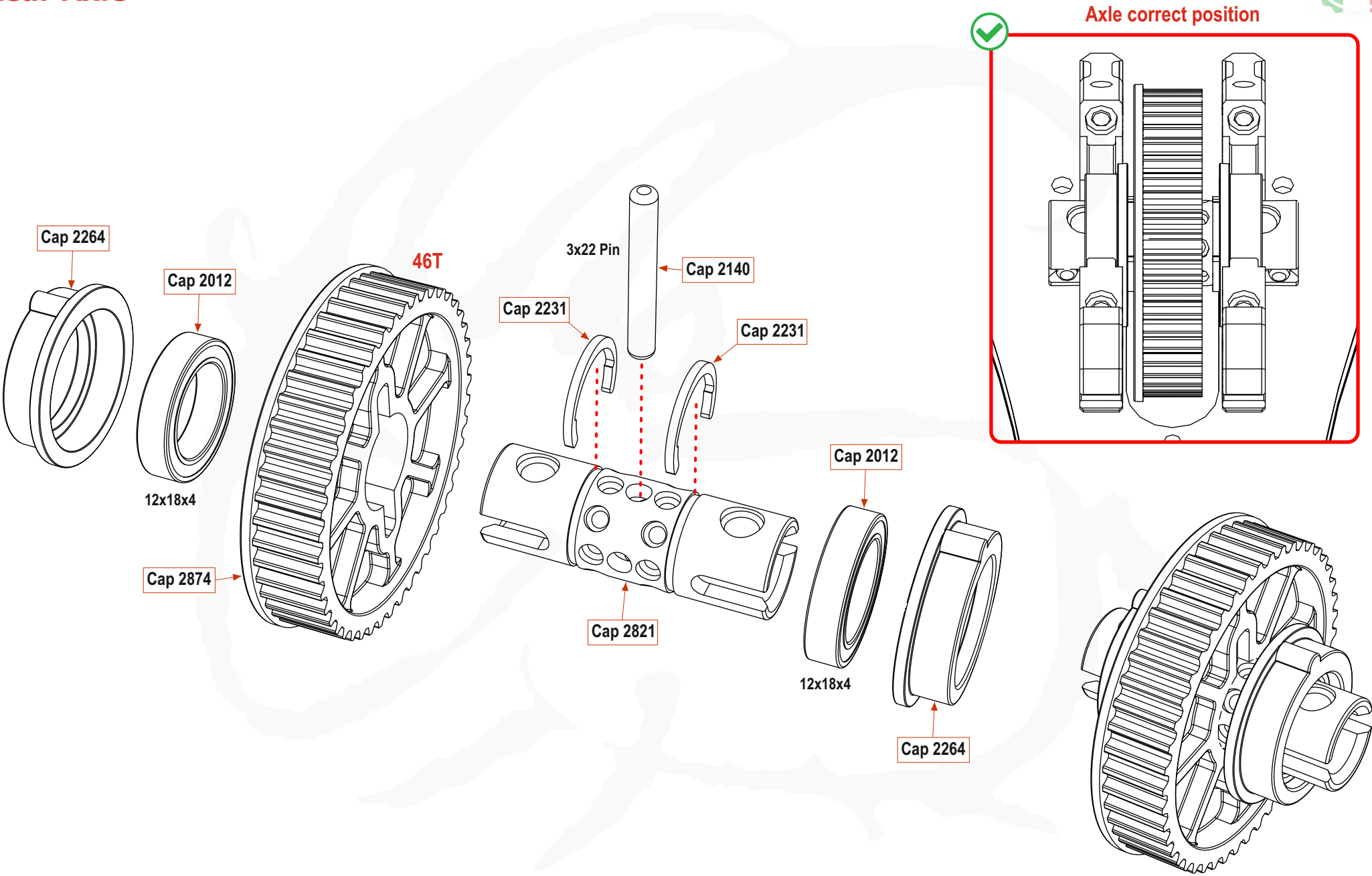
Axle correct position
Cap 2264
Cap 2012
12x18x4
Cap 2874
46T
3x22 Pin
Cap 2140
Cap 2231
Cap 2231
Cap 2821
Cap 2012
12x18x4
Cap 2264

BAG G - STEP 7.0

Middle Front Axle

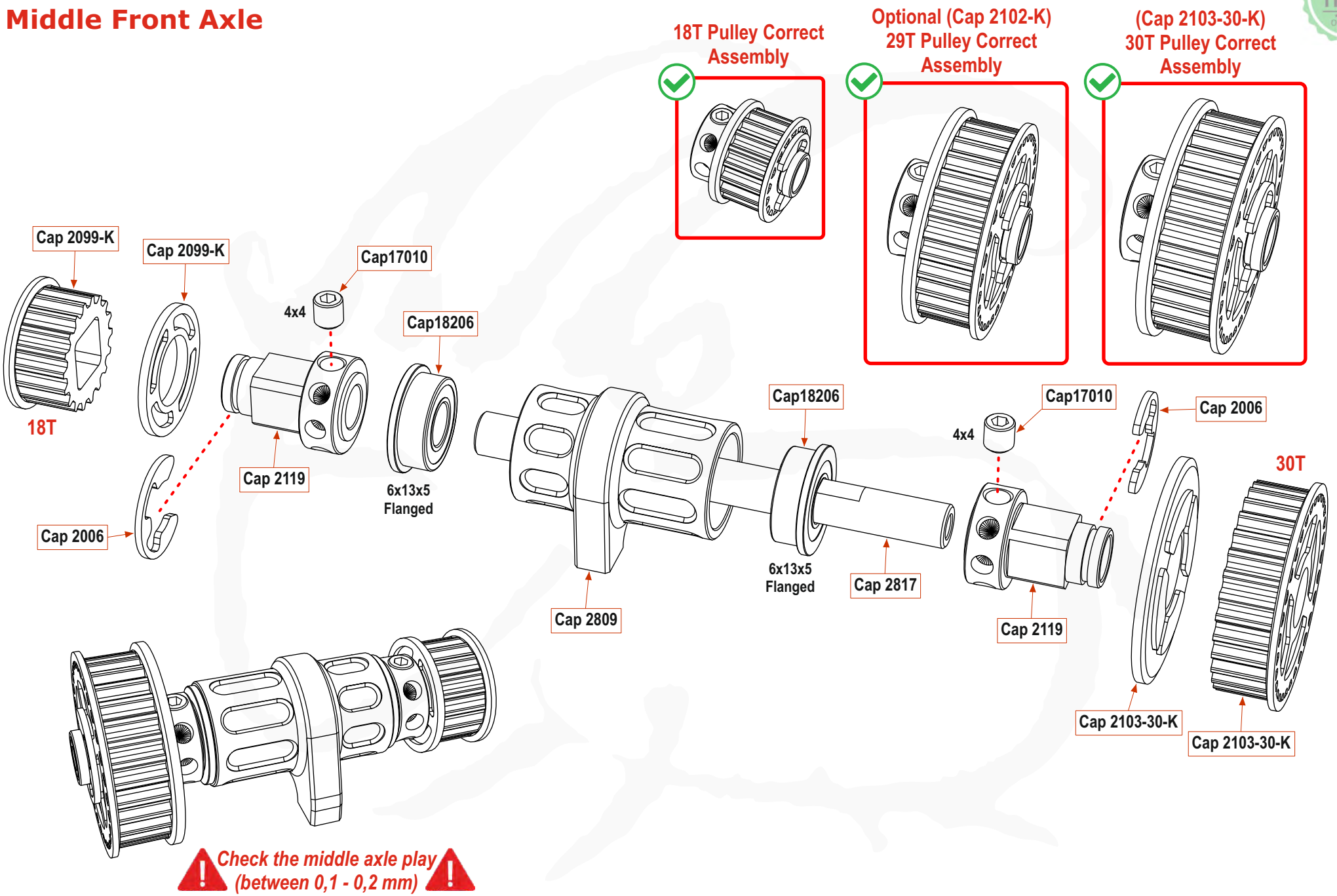

Central support/Belt tensioner

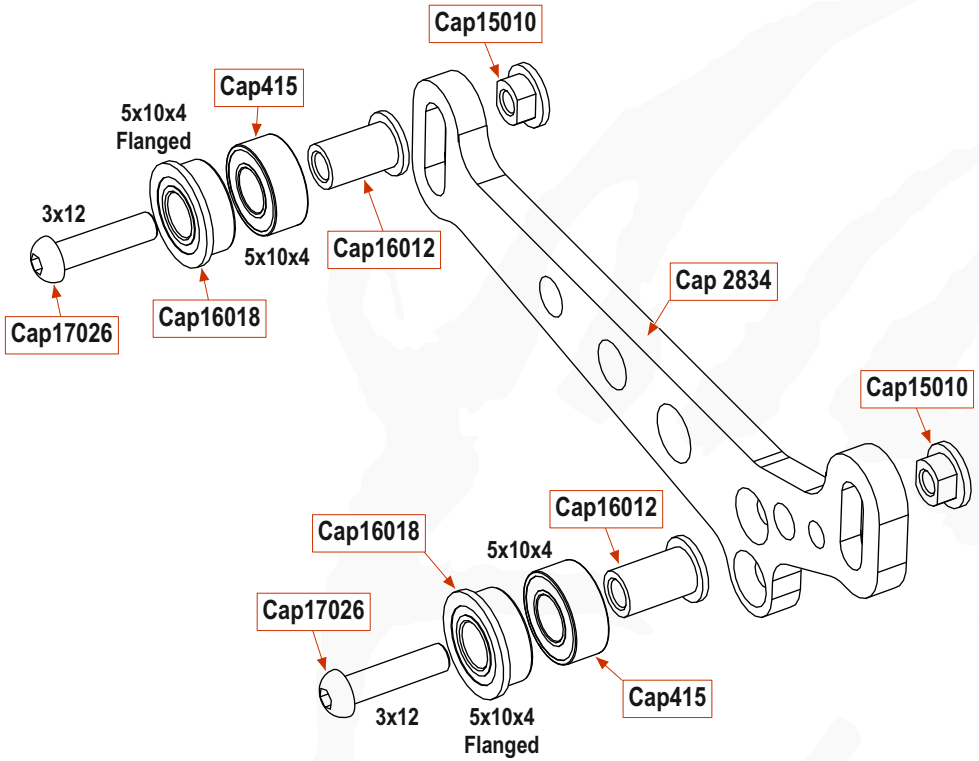

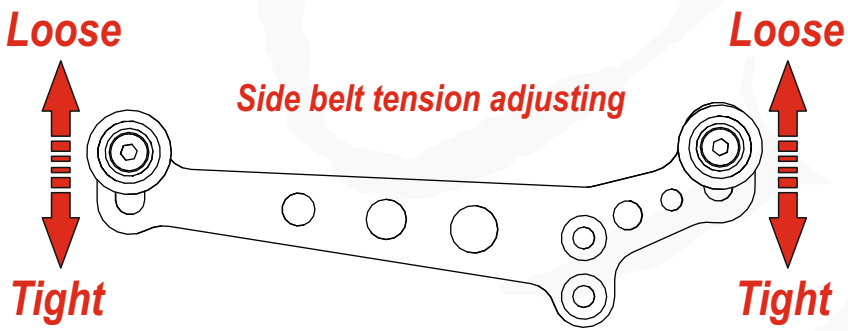

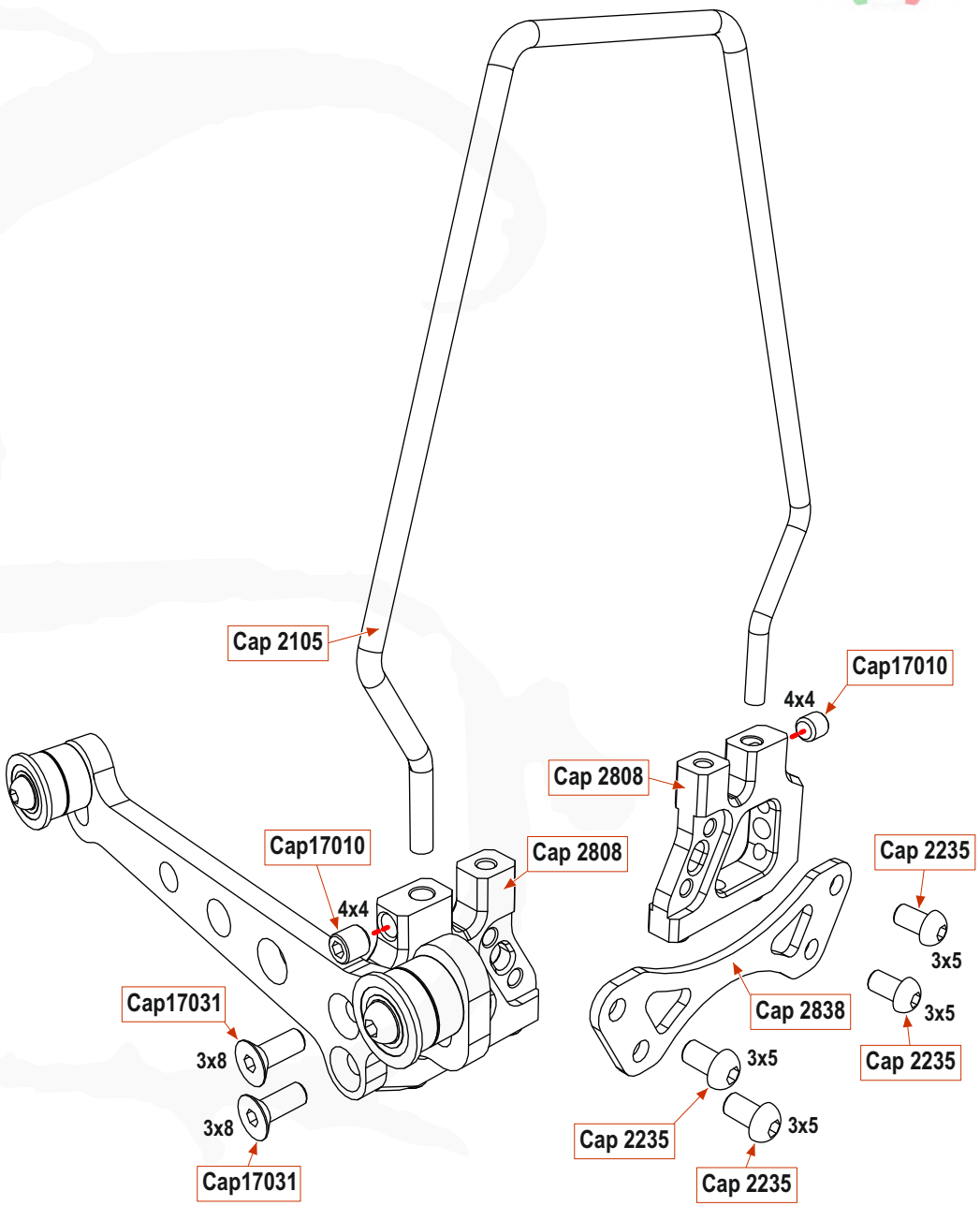

Speed Gear

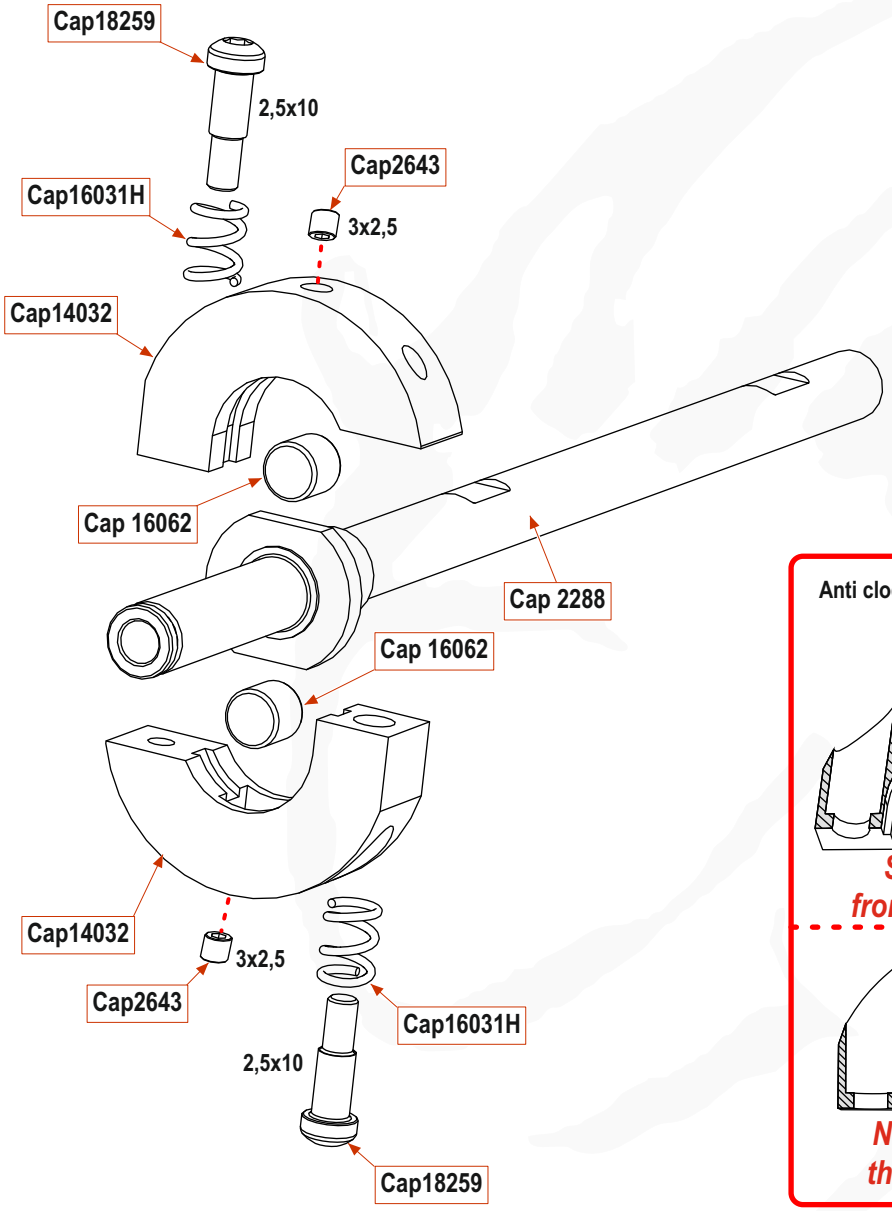

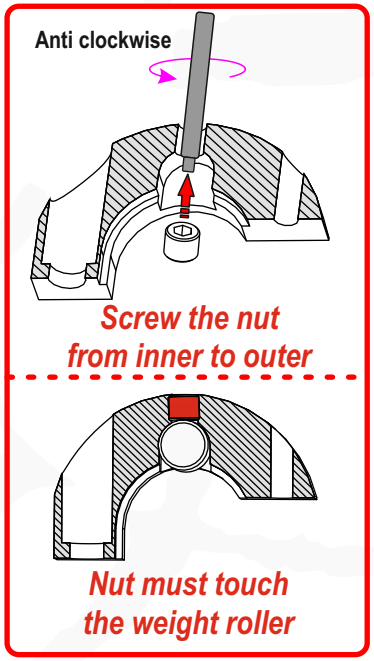

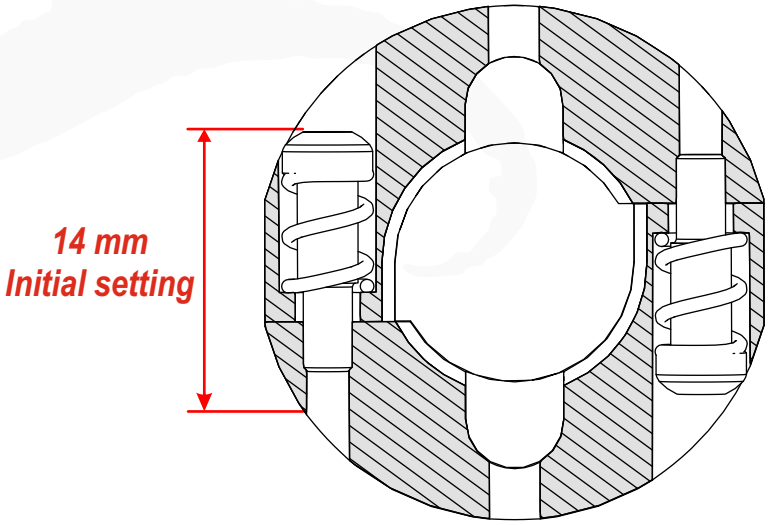

Adjust the screws with the same height !!!

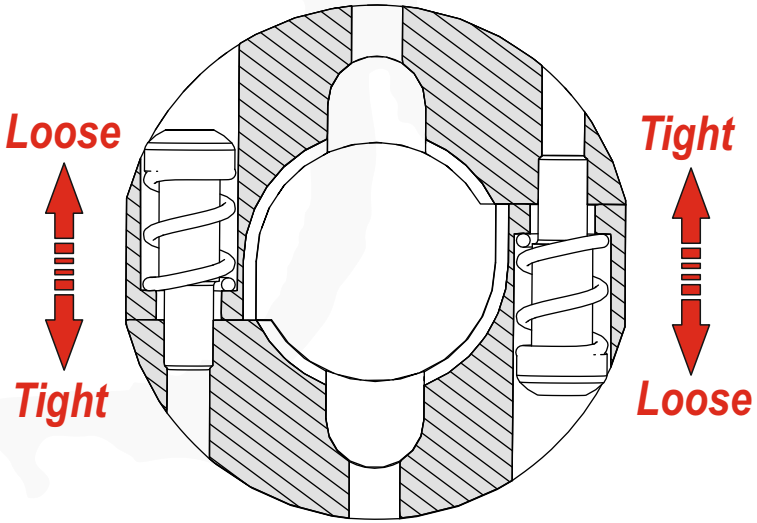

BAG I - STEP 9.1

Speed Gear

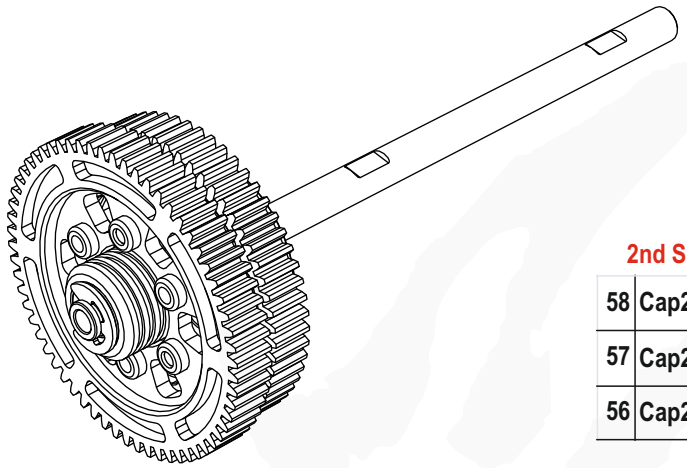

2nd Spur Gear

58	Cap2051B-58	Kit
57	Cap2051B-57	Opt
56	Cap2051B-56	Opt

1st Spur Gear

62	Cap2050B-62	Kit
61	Cap2050B-61	Opt
60	Cap2050B-60	Opt

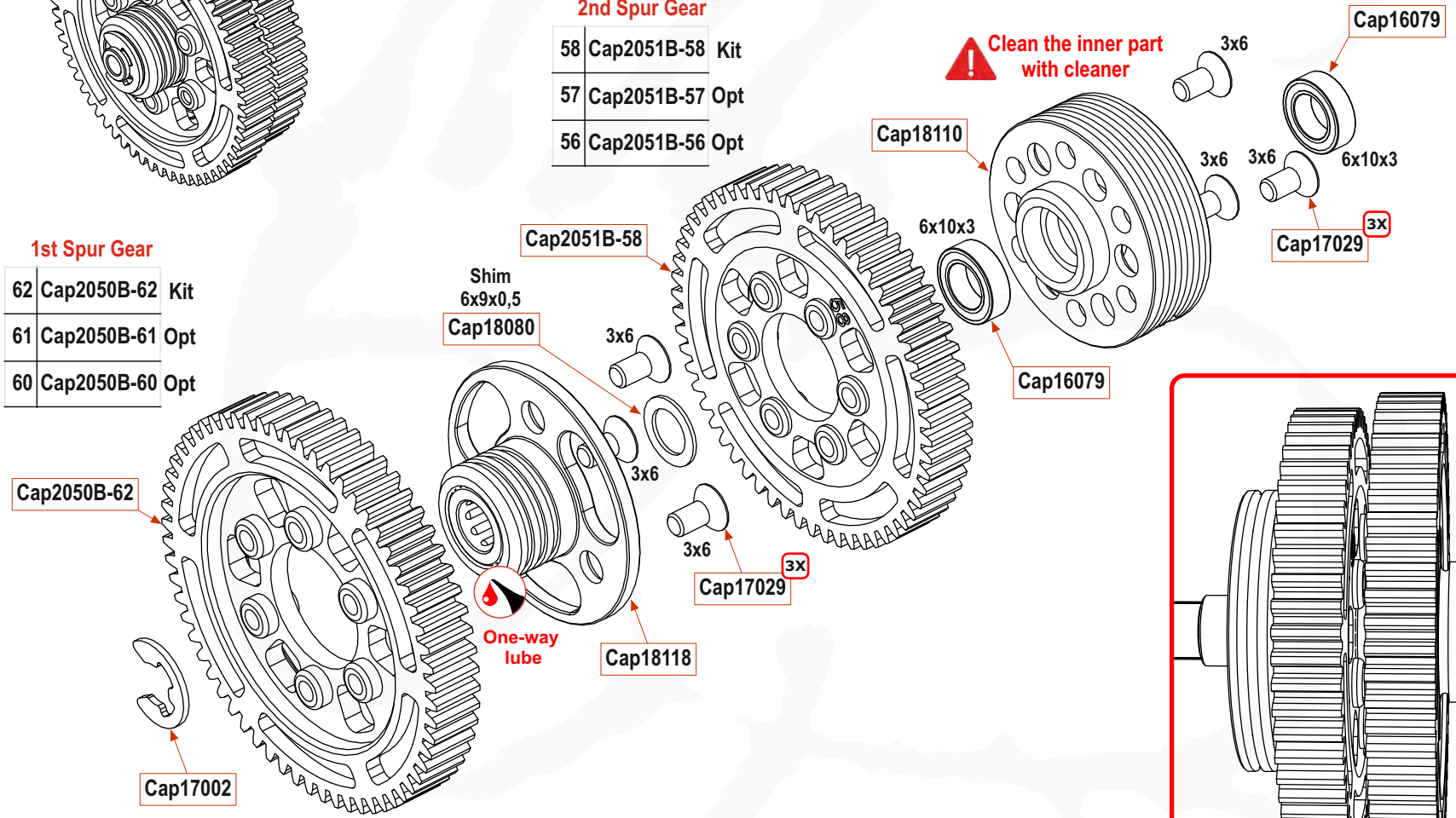

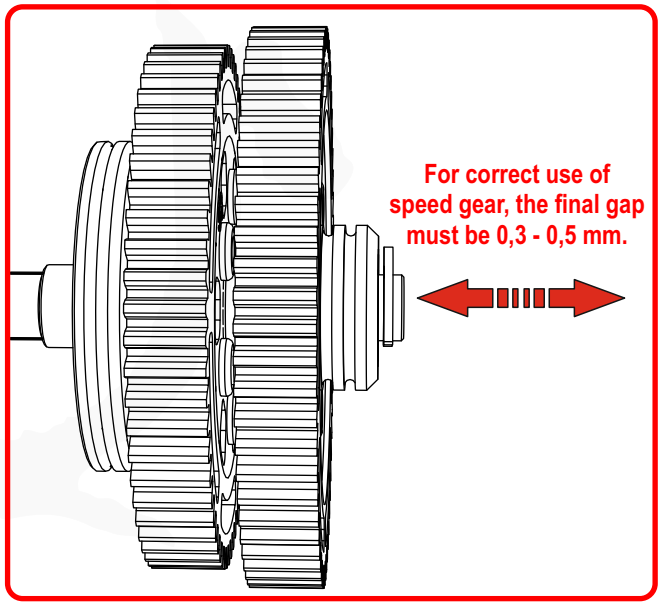

Sway Bars

Front

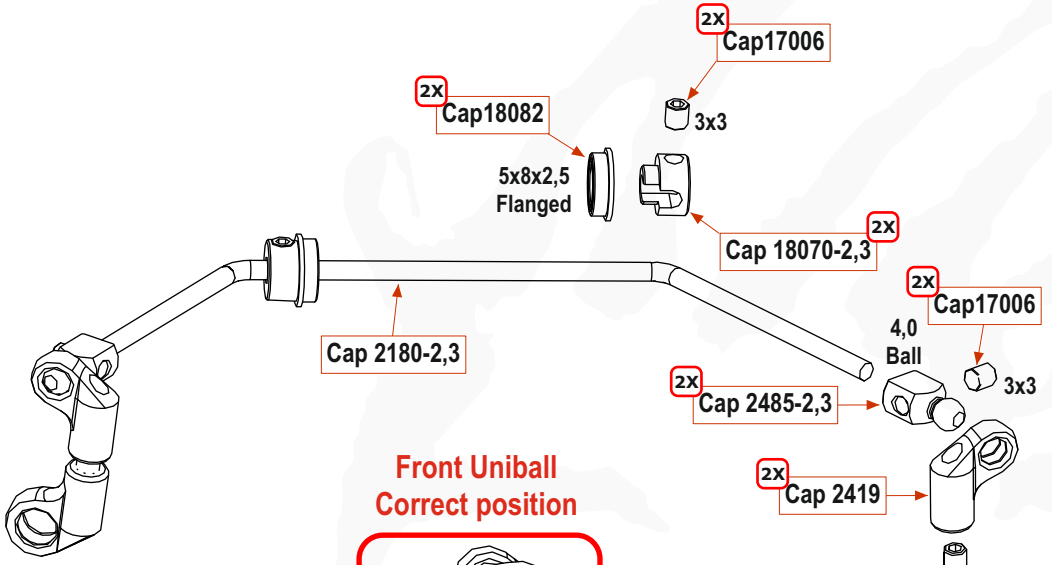

Use 1,5 mm Hex Screwdriver on this direction!

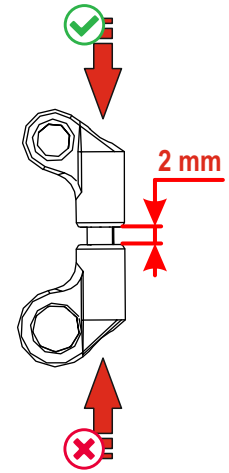

Front Uniball Correct position

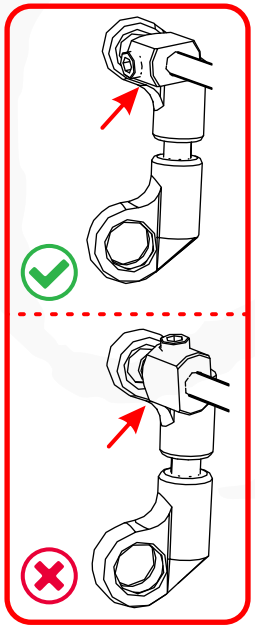

Ø2,0	Cap 2180-2,0
Ø2,3	Cap 2180-2,3
Ø2,5	Cap 2180-2,5

Front Sway Bar

Rear

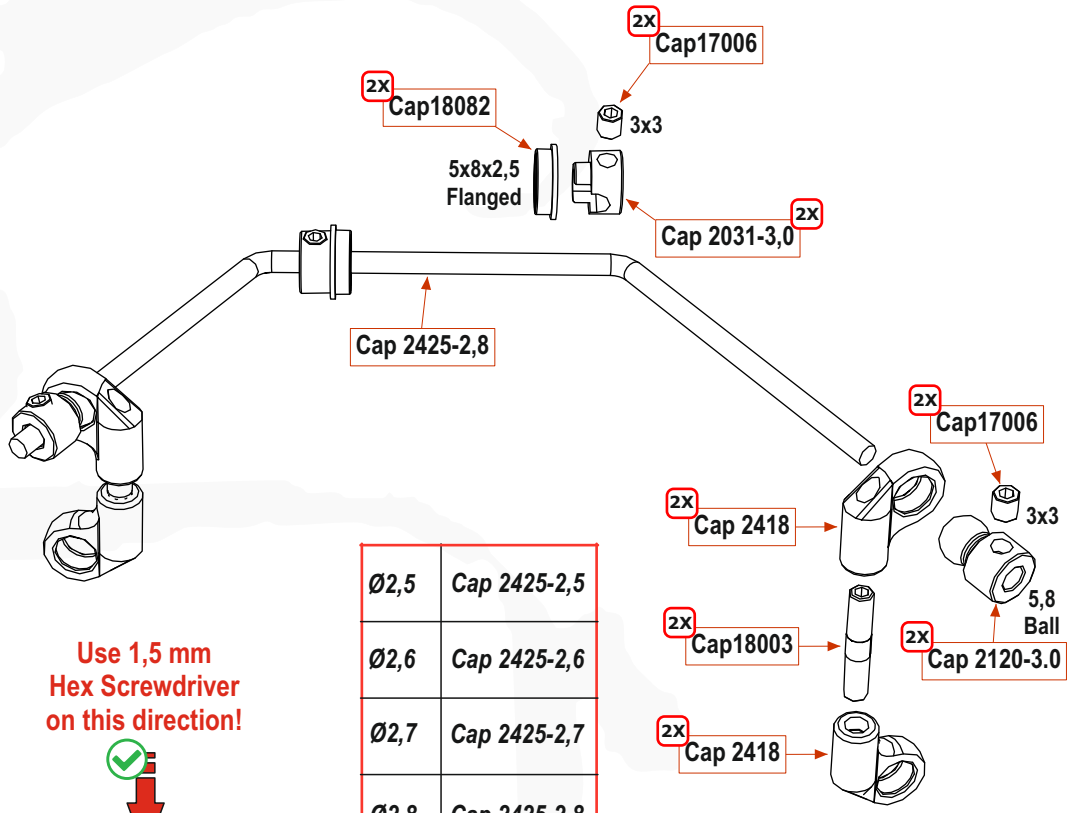

Use 1,5 mm Hex Screwdriver on this direction!

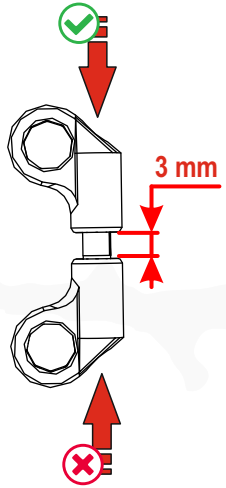

Ø2,5	Cap 2425-2,5
Ø2,6	Cap 2425-2,6
Ø2,7	Cap 2425-2,7
Ø2,8	Cap 2425-2,8
Ø2,9	Cap 2425-2,9
Ø3,0	Cap 2425-3,0

Rear Sway Bar

Brake System

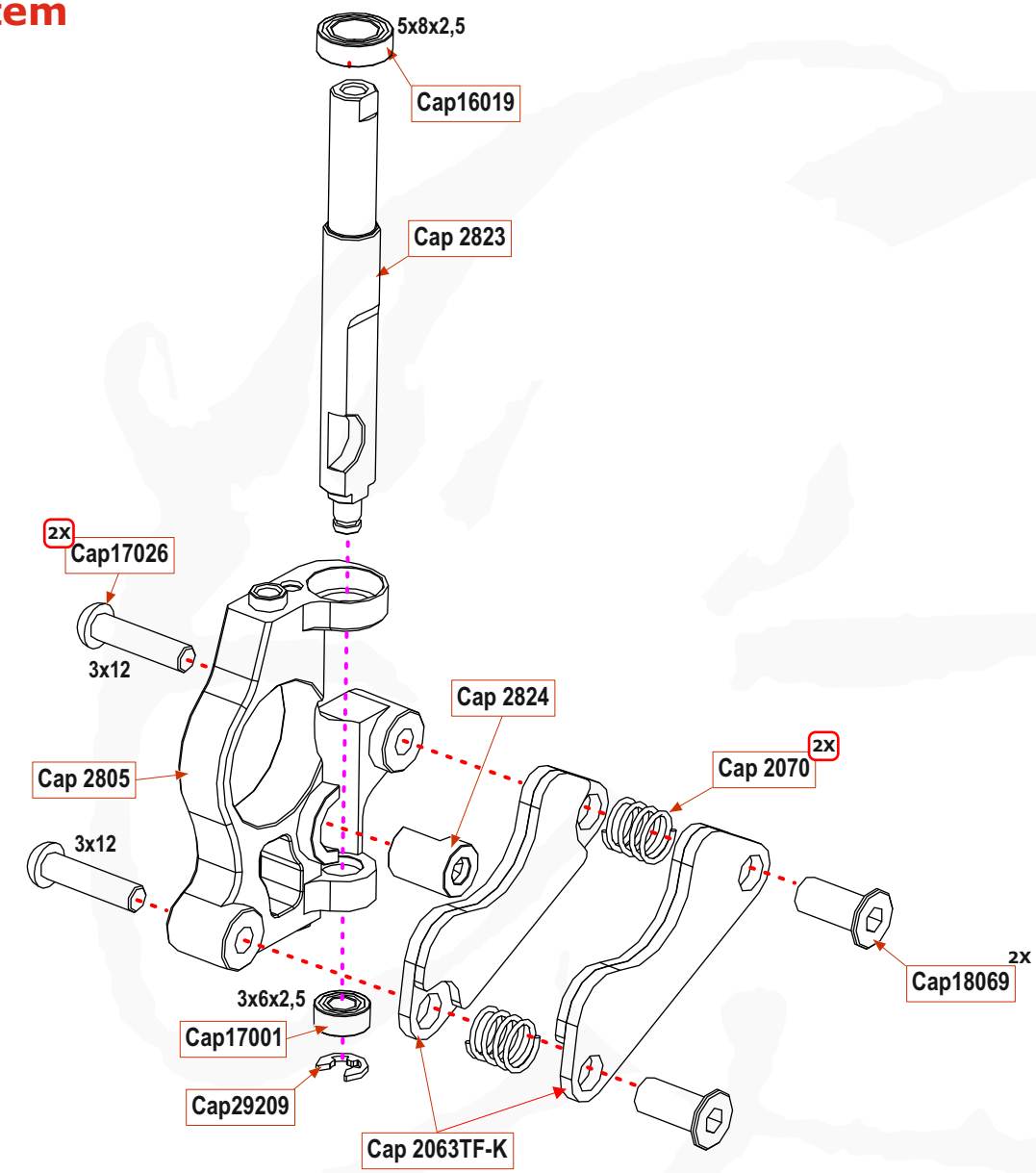

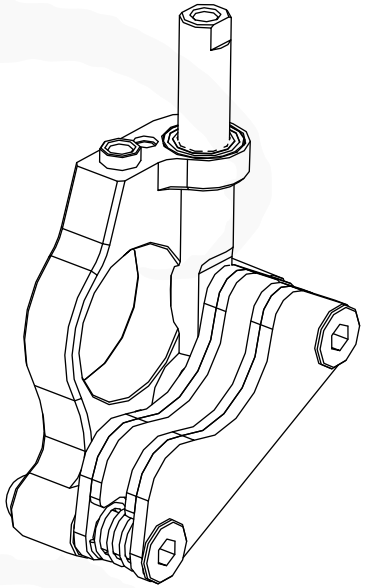



Cap 2063TF-K	Kit
Cap 2063C-K	Opt

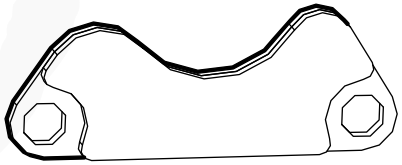

Flip the brake pad to change the response of braking system

Rear Transmission

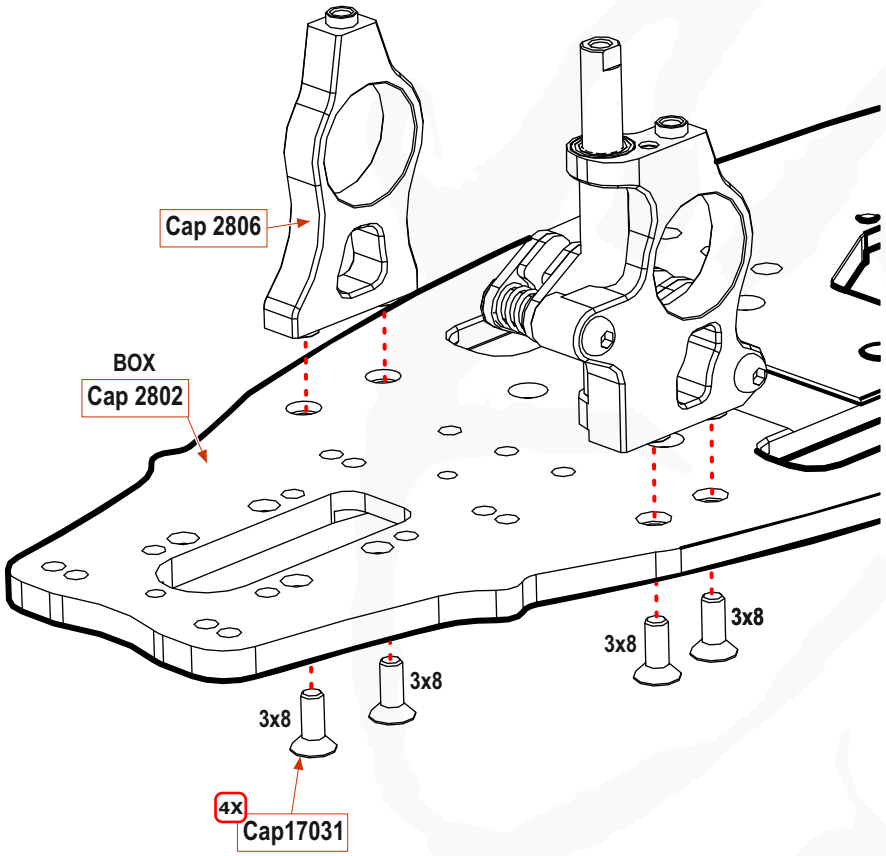

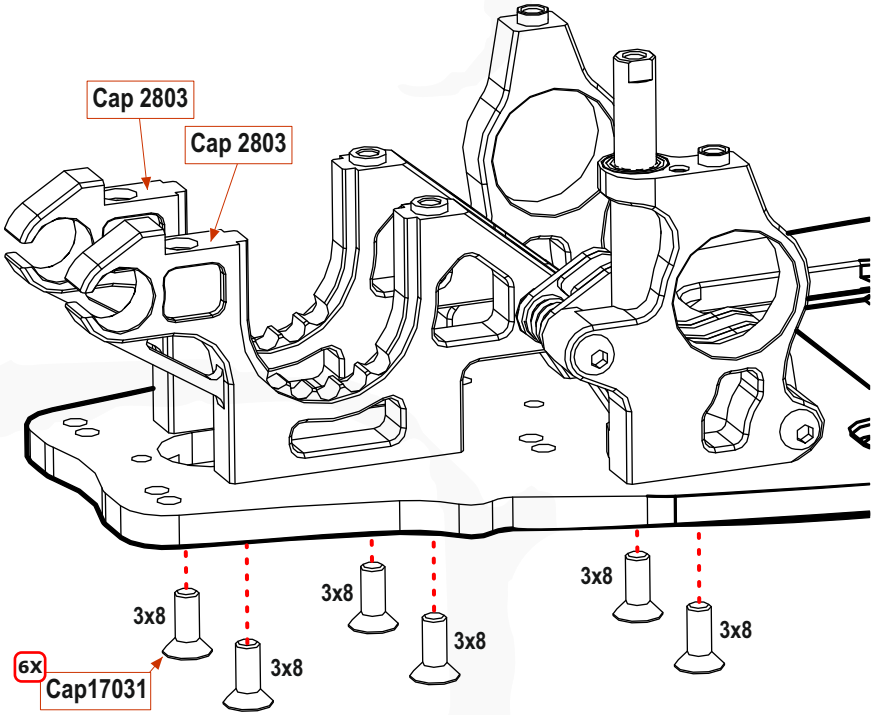

BAG N - STEP 12.1

Rear Transmission

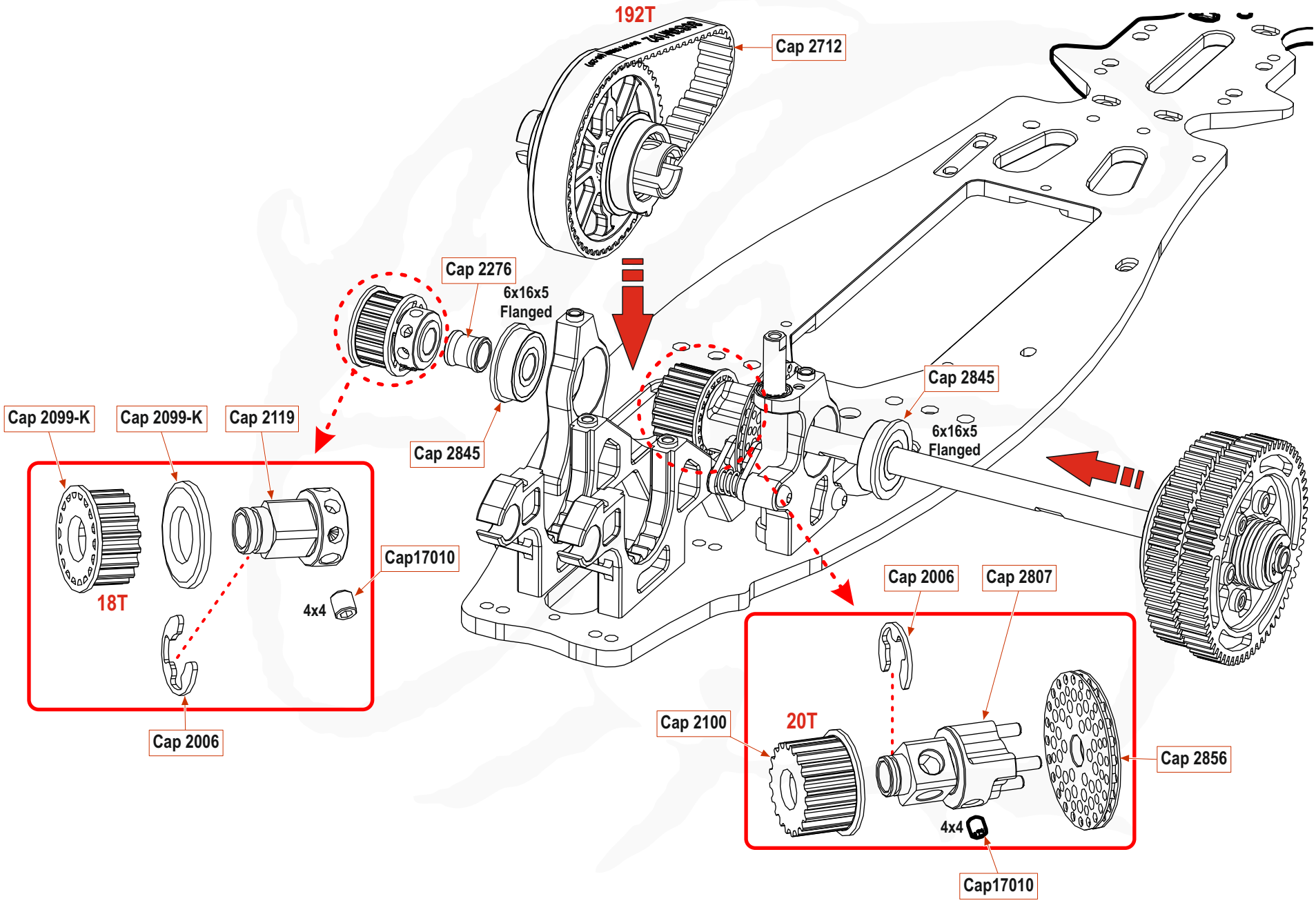

Rear Transmission

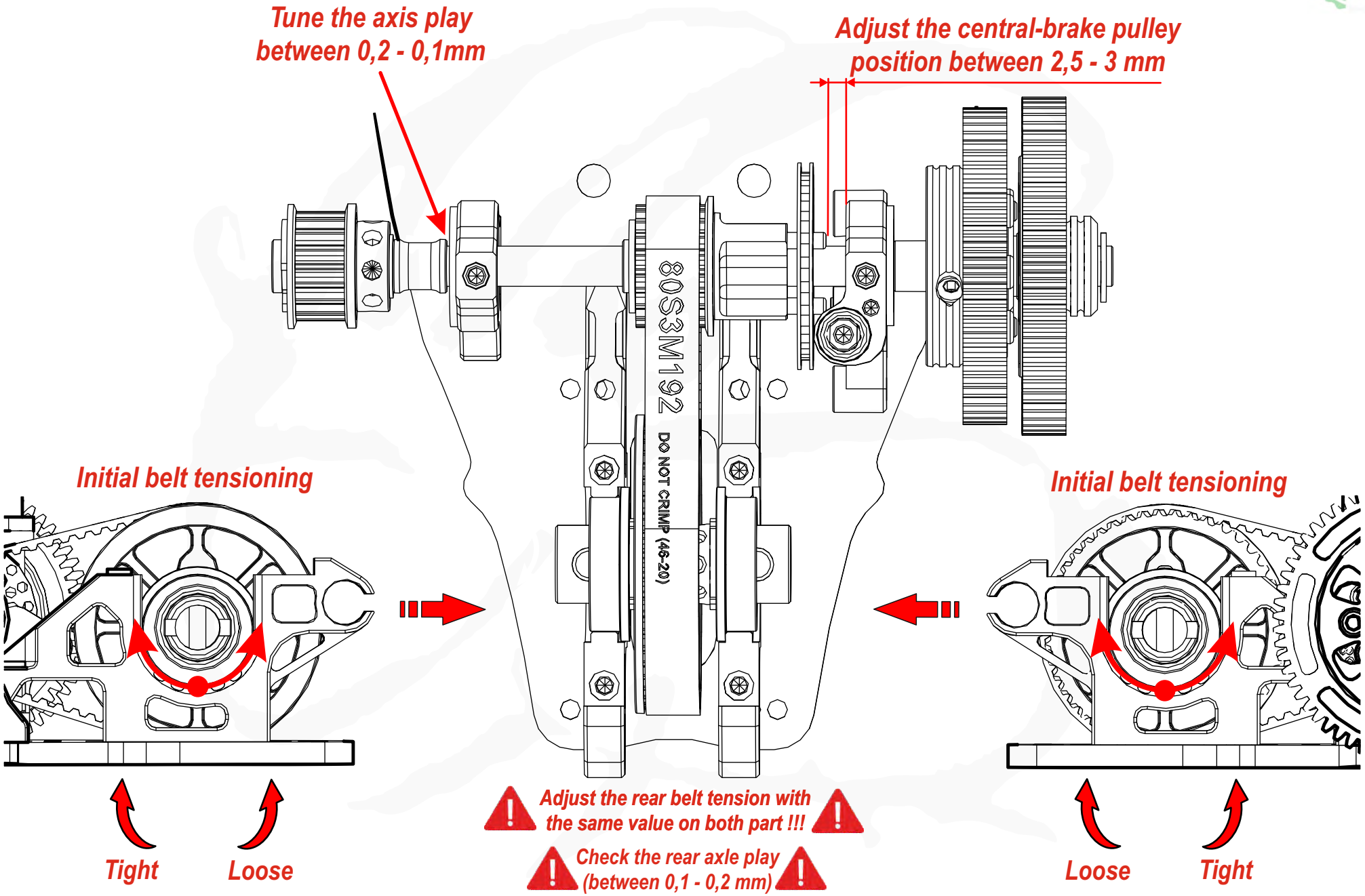

BAG N - STEP 12.3

Rear Transmission

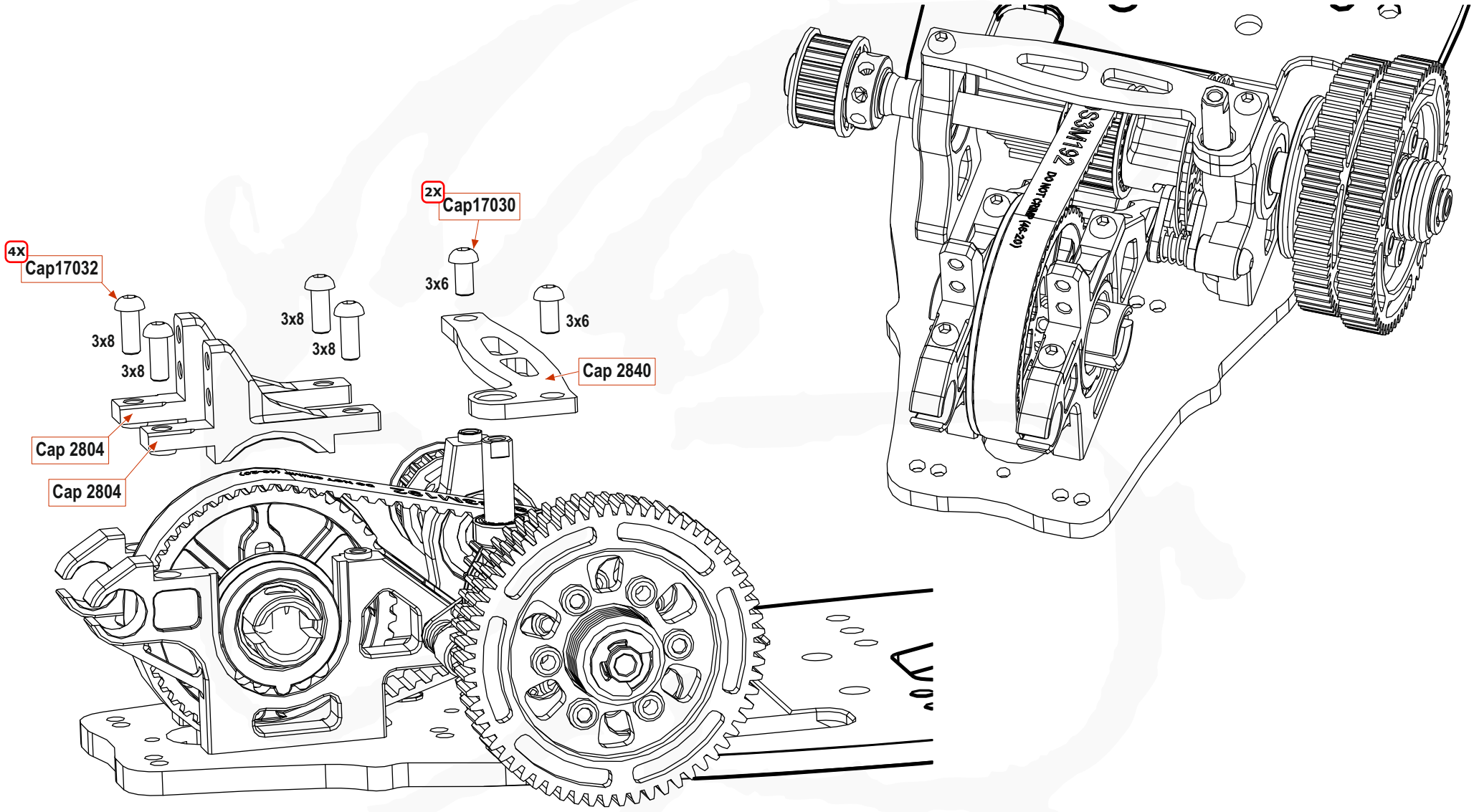

Rear Suspensions

Simmetrical Assembly X2

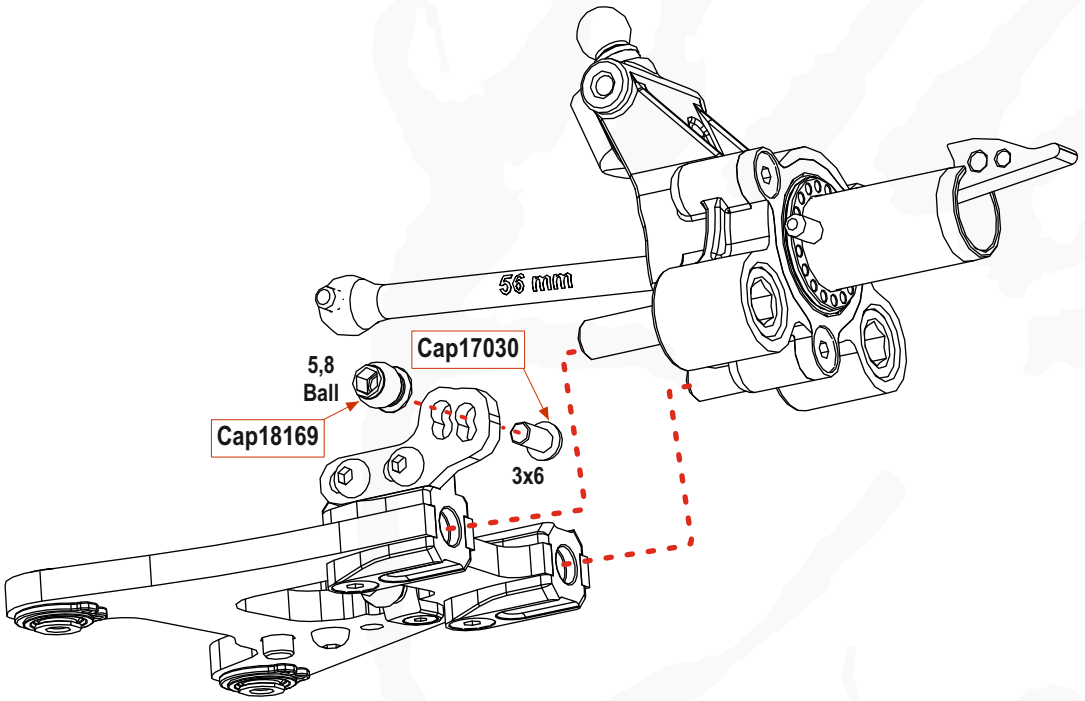

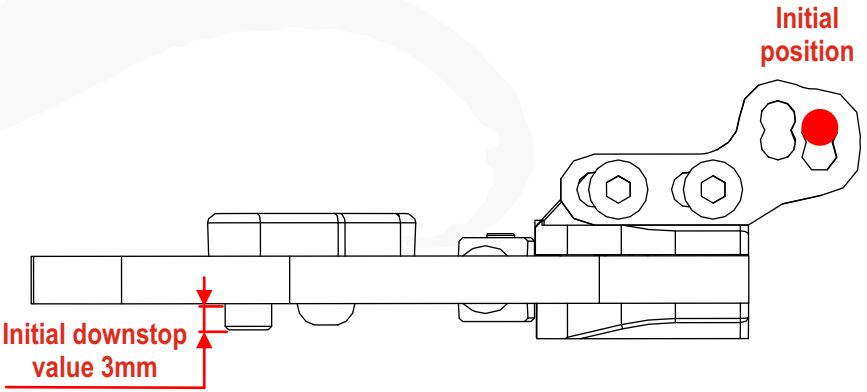

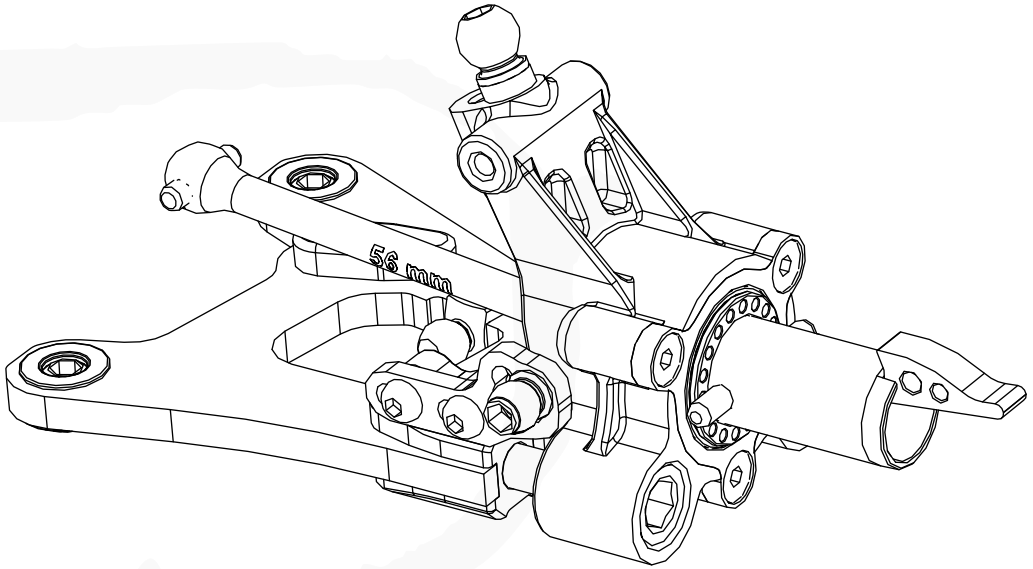

Rear Suspensions

Simmetrical Assembly X2

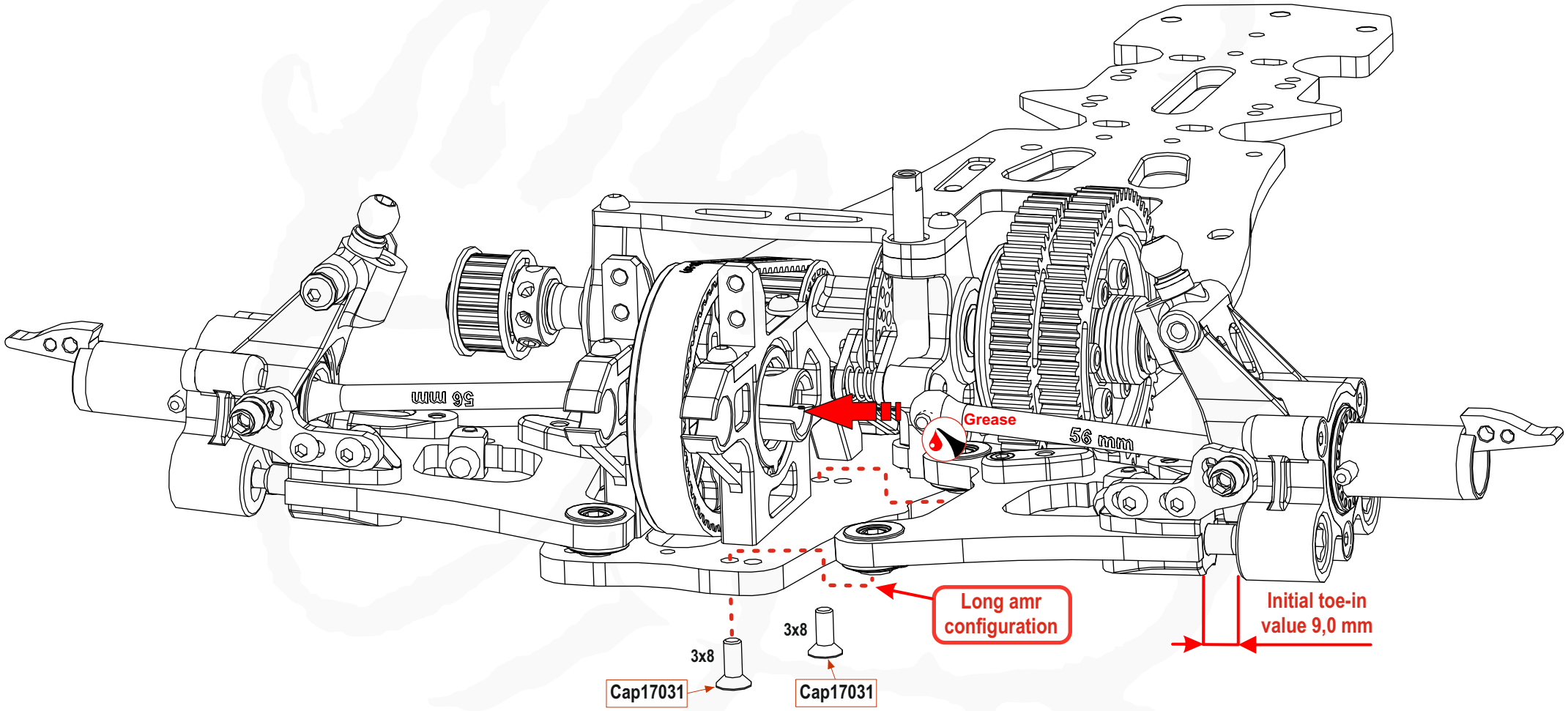

Rear Suspensions

Simmetrical Assembly X2

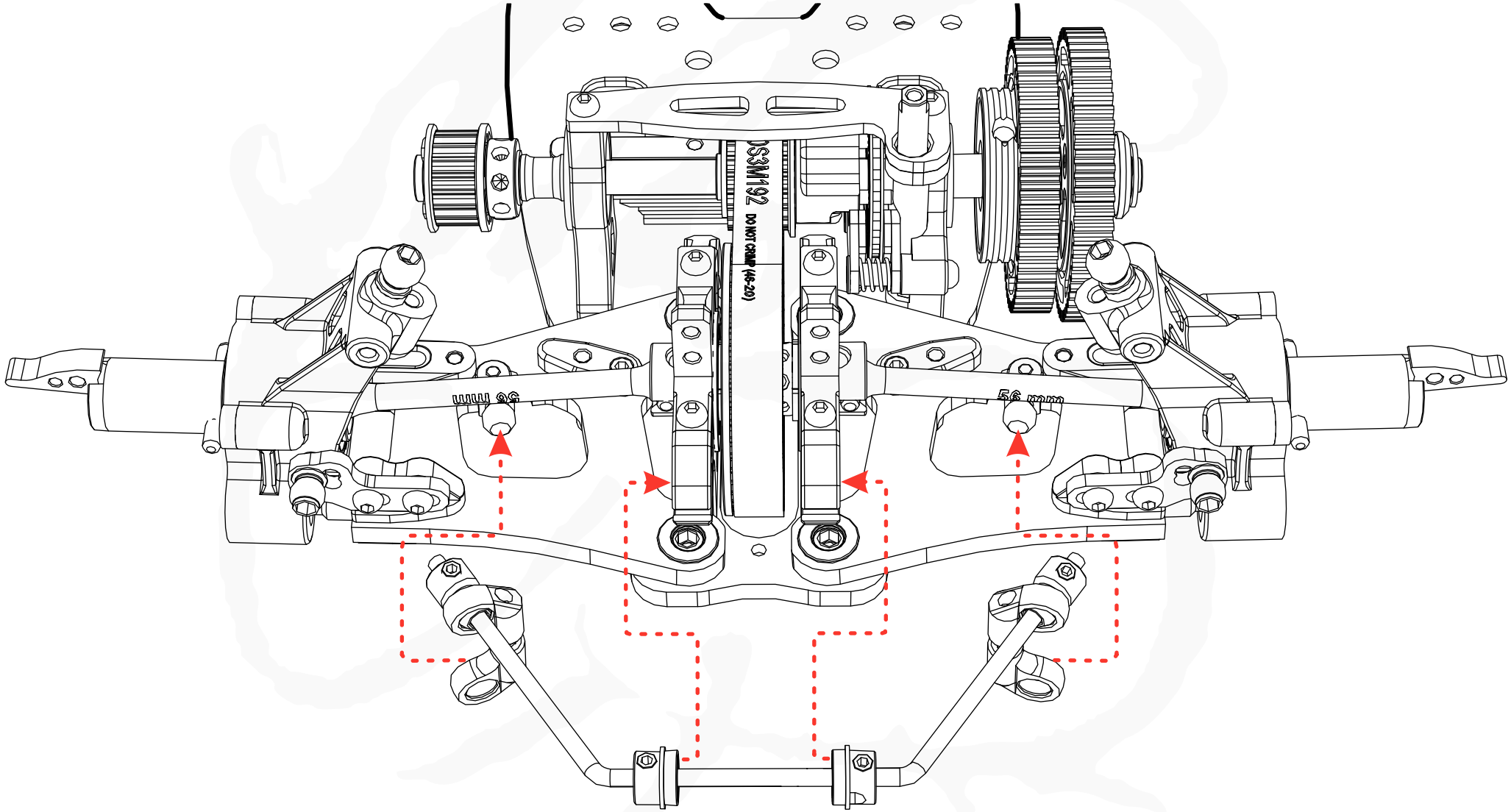

Rear Suspensions

Simmetrical Assembly X2

Adjust the Sway bar with the same lenght on both parts!!!

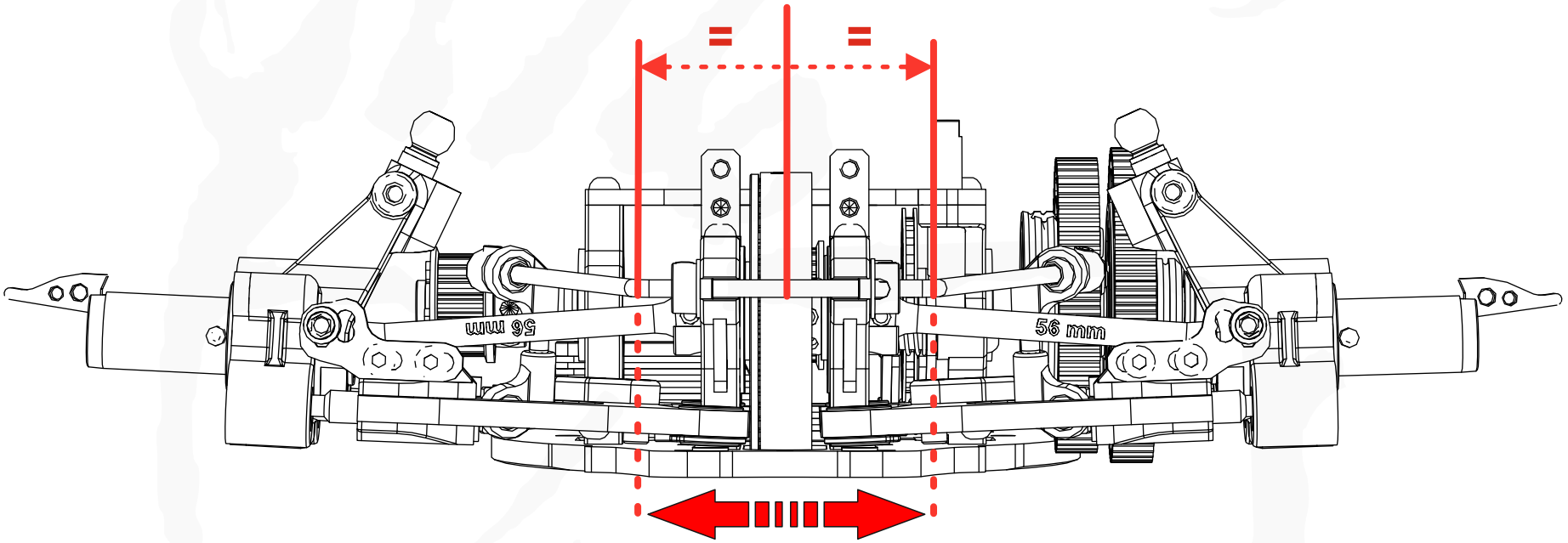

Adjust the play of sway bar between 0,1- 0,2 mm.

Rear Suspensions

Simmetrical Assembly X2

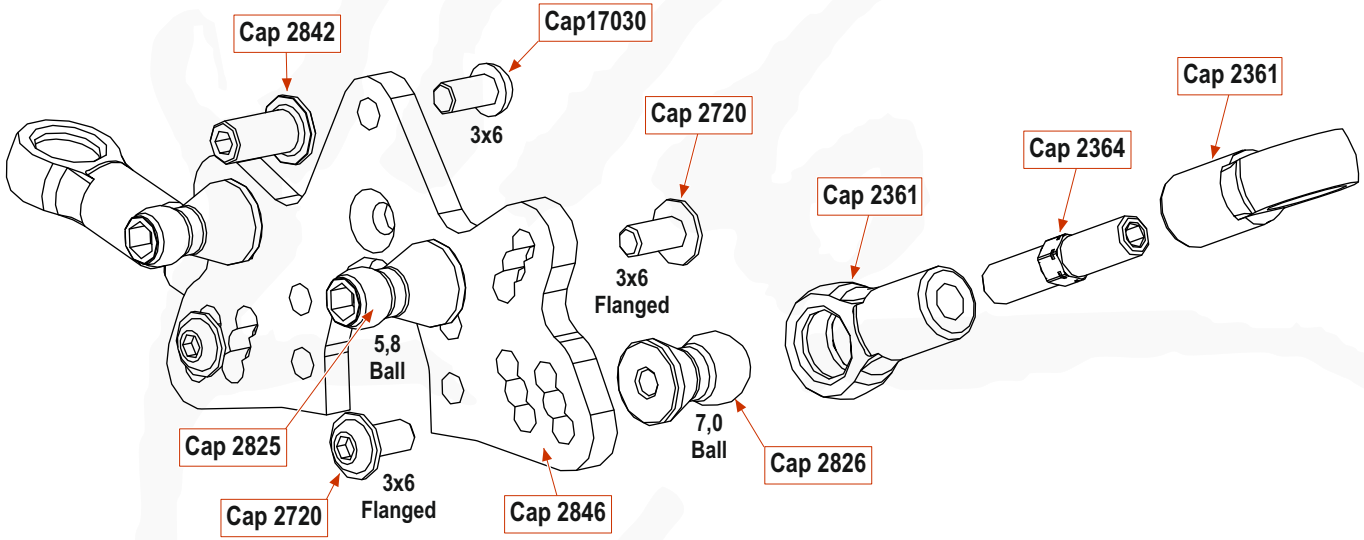

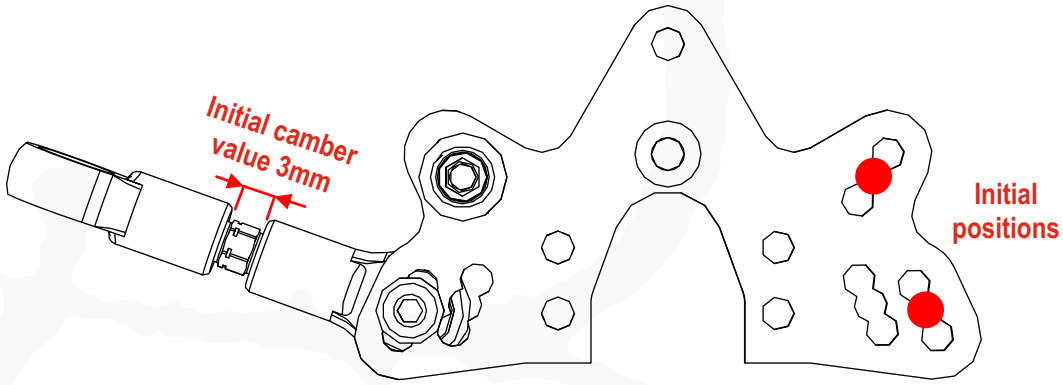

Rear Suspensions

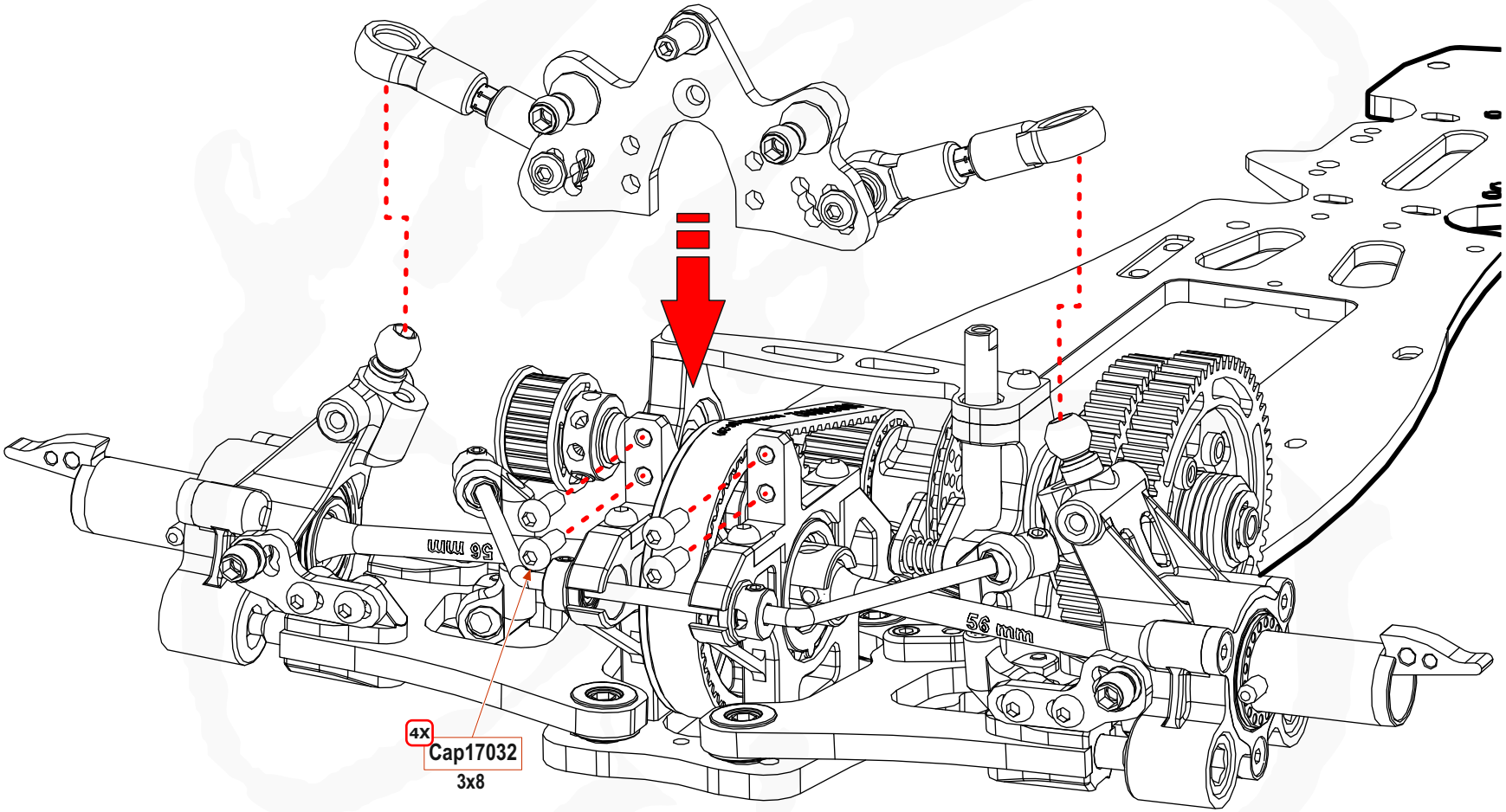

Rear Suspensions

Simmetrical Assembly X2

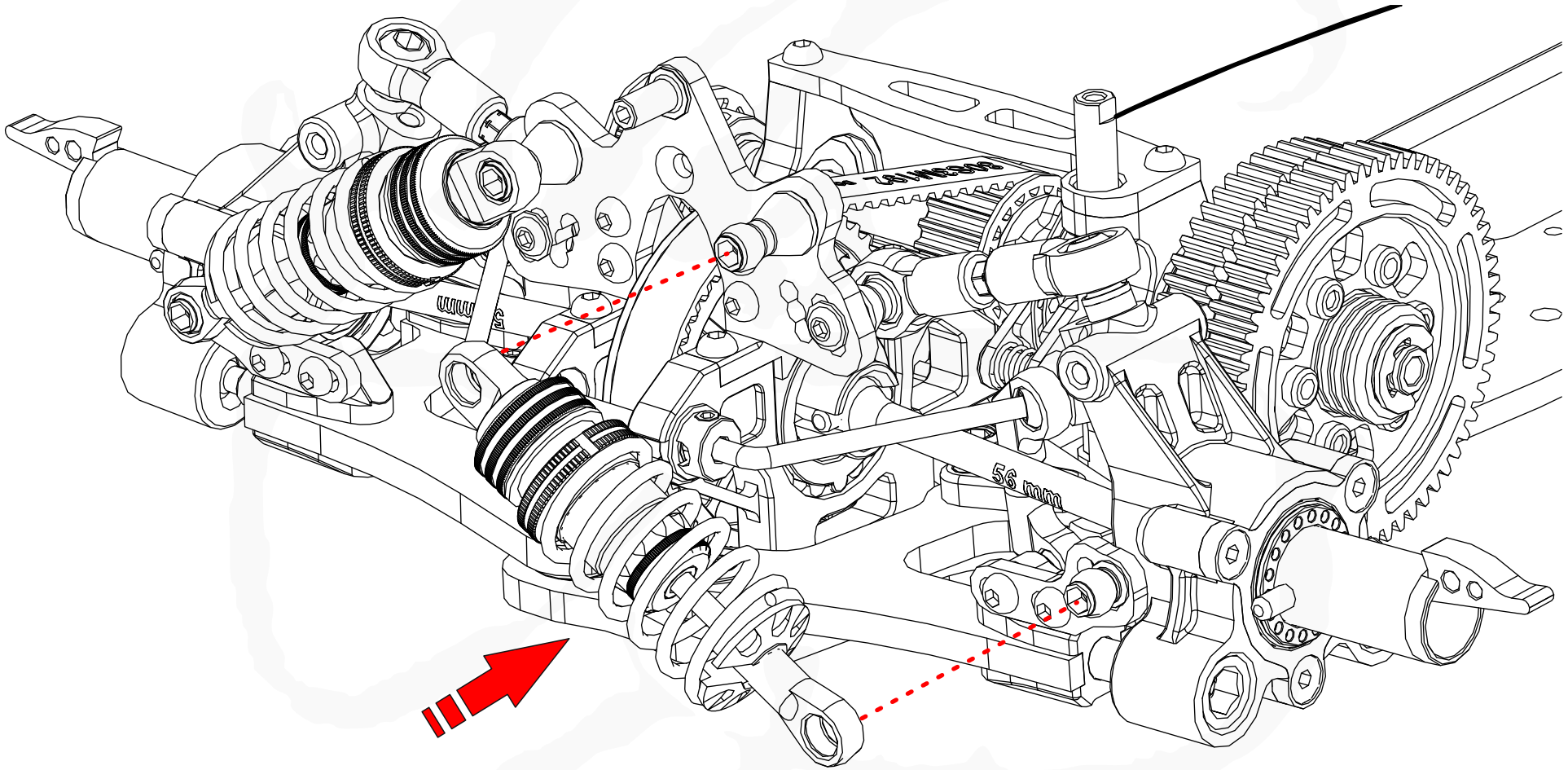

Rear Suspensions

Simmetrical Assembly X2

Adjust the eccentric body holder position in according with the front body holder position!!!

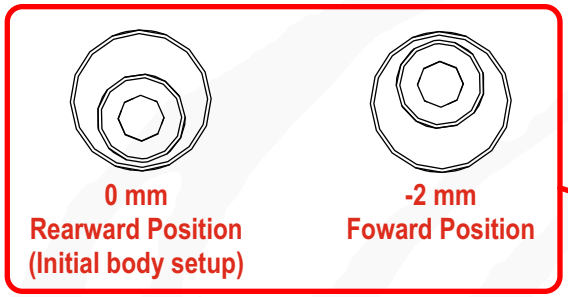

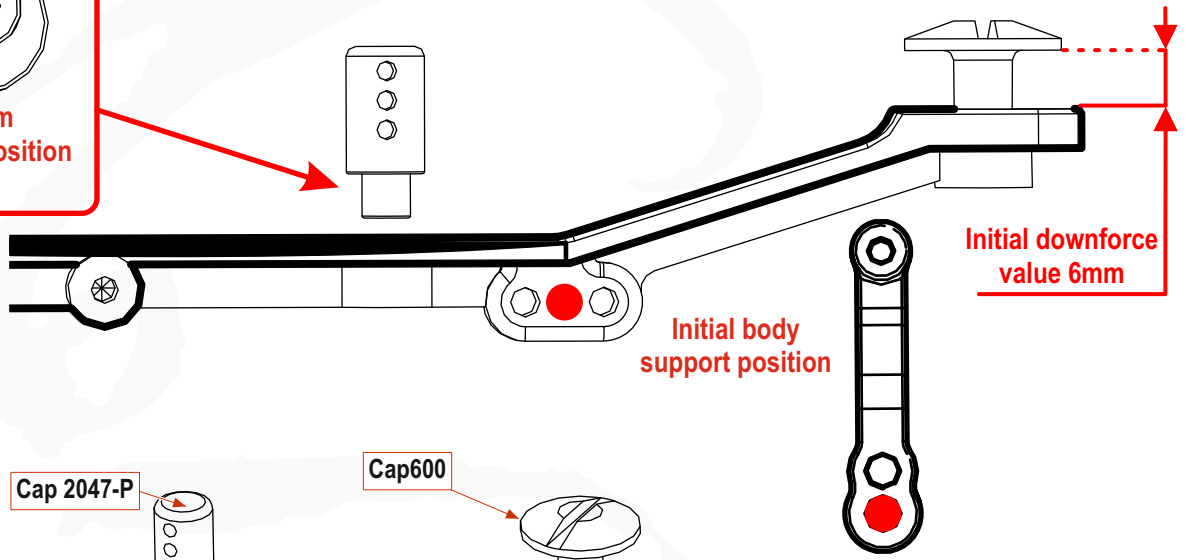

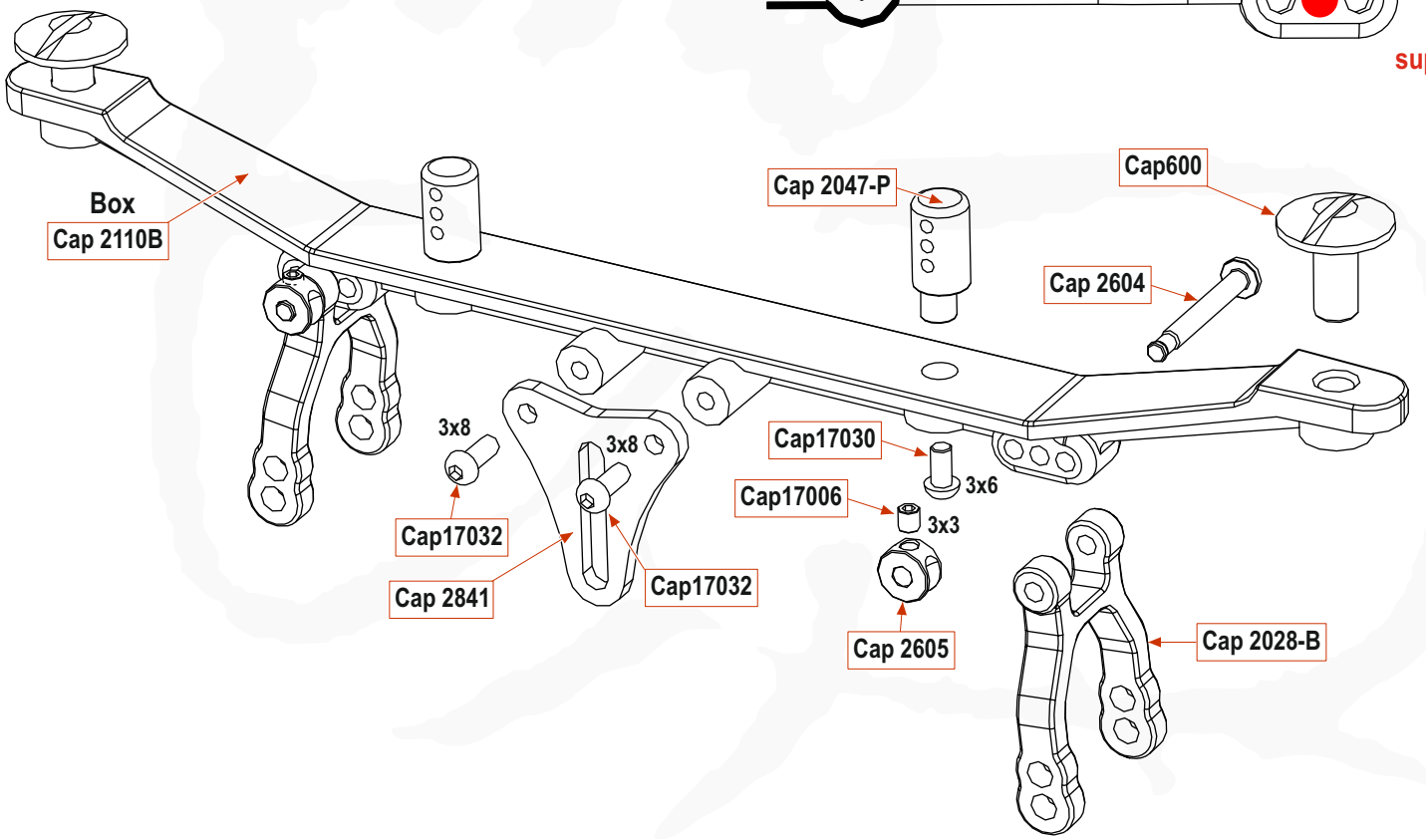

BAG O - STEP 13.8

Rear Suspensions

Simmetrical Assembly X2

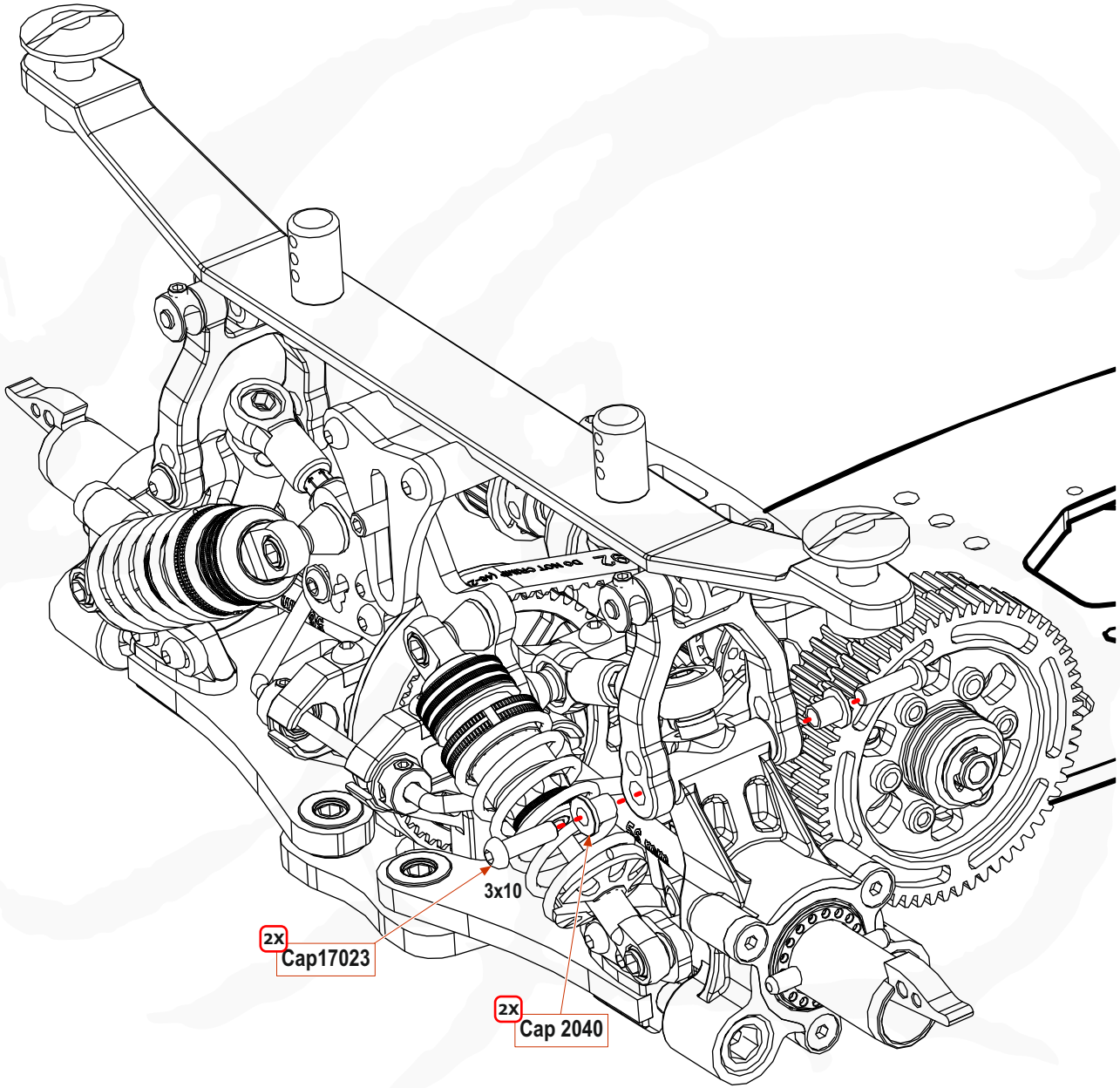

Middle Transmission

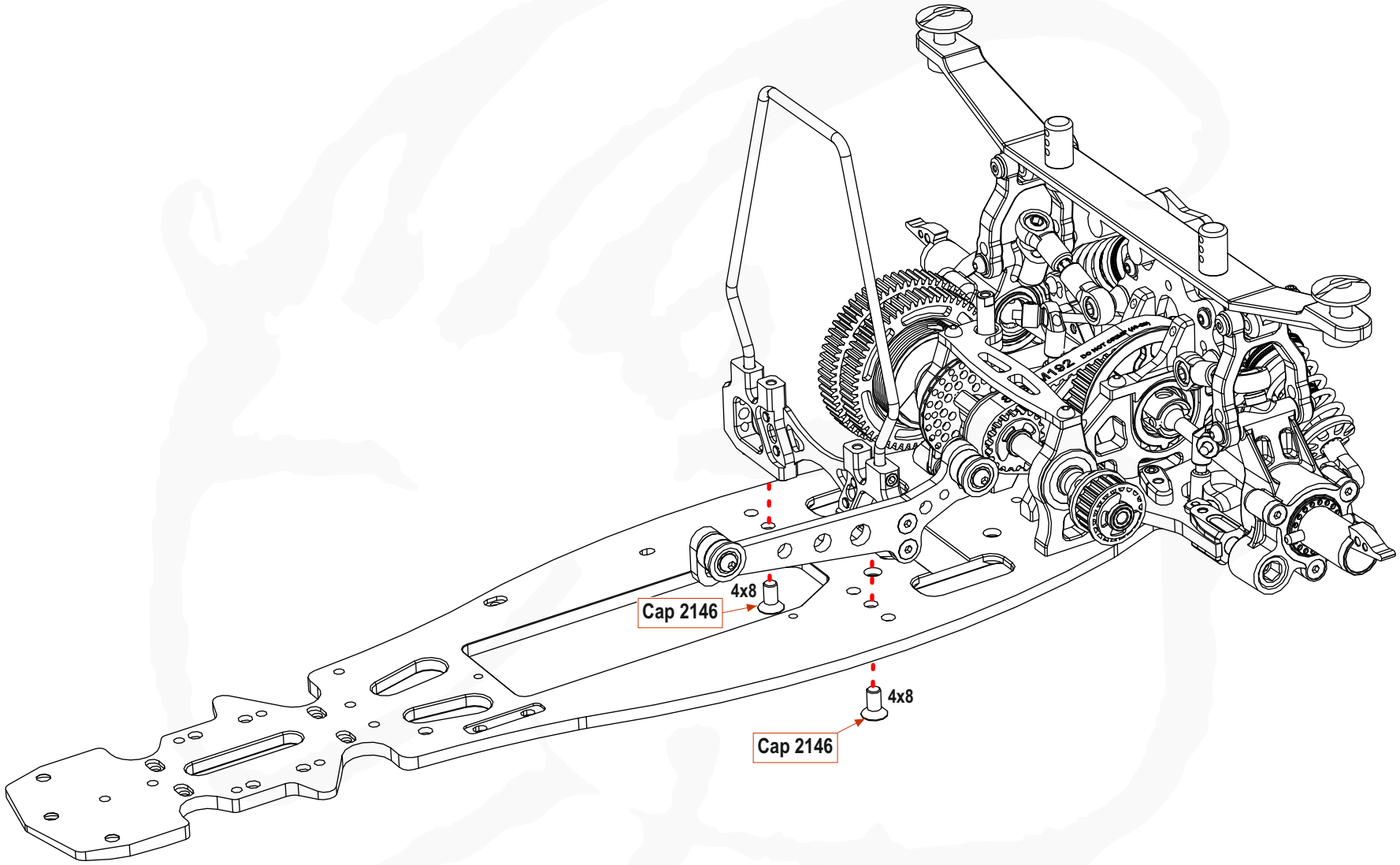

BAG P - STEP 14.1

Middle Transmission

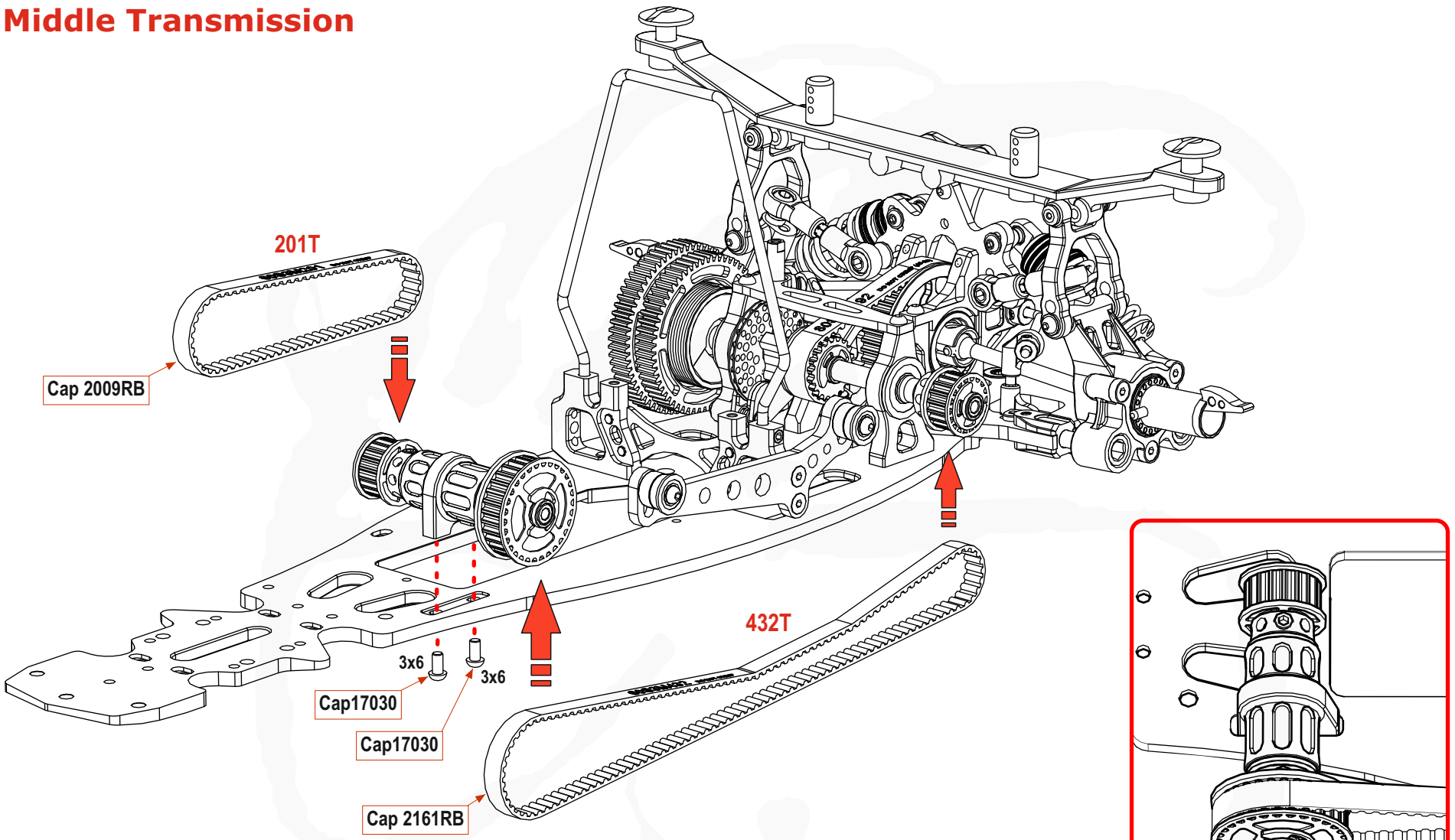

Adjust the position according front and side belt tension

BAG P - STEP 14.2

Middle Transmission

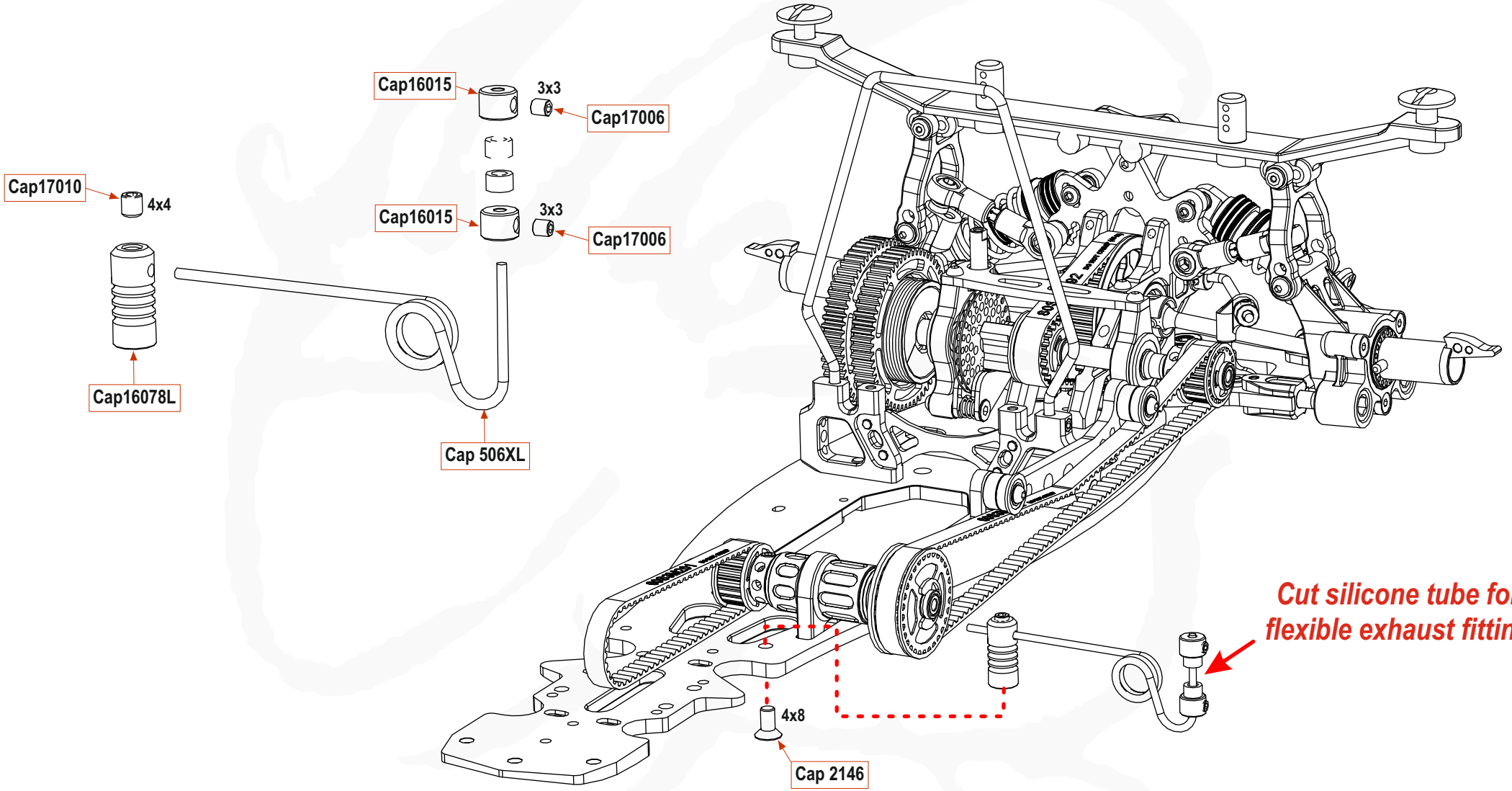

Front Transmission

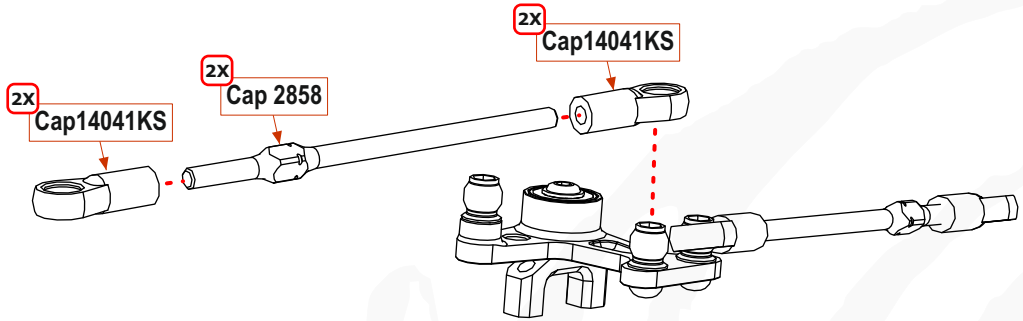

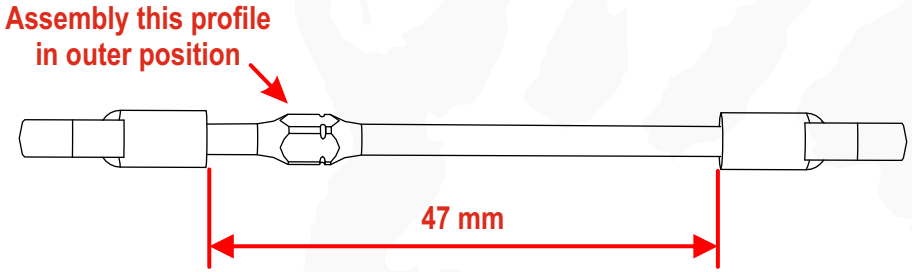

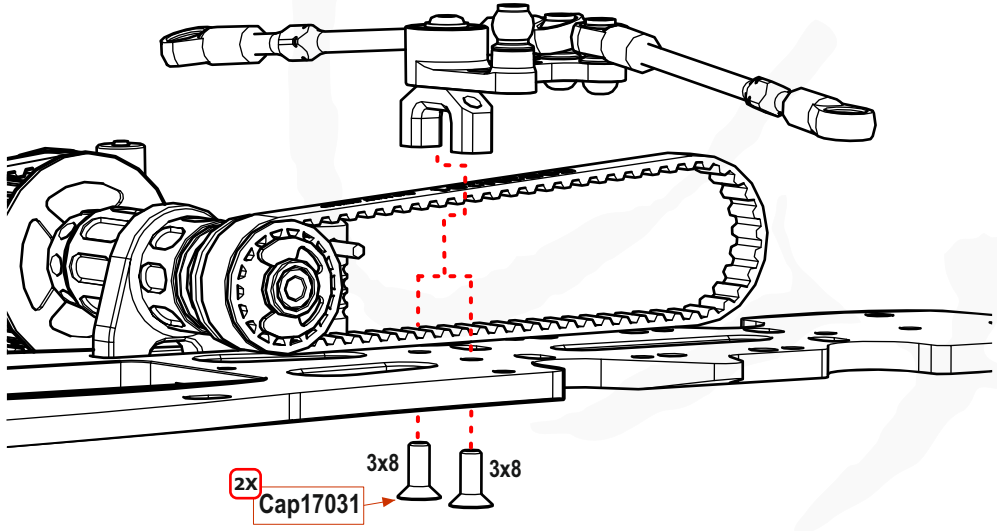

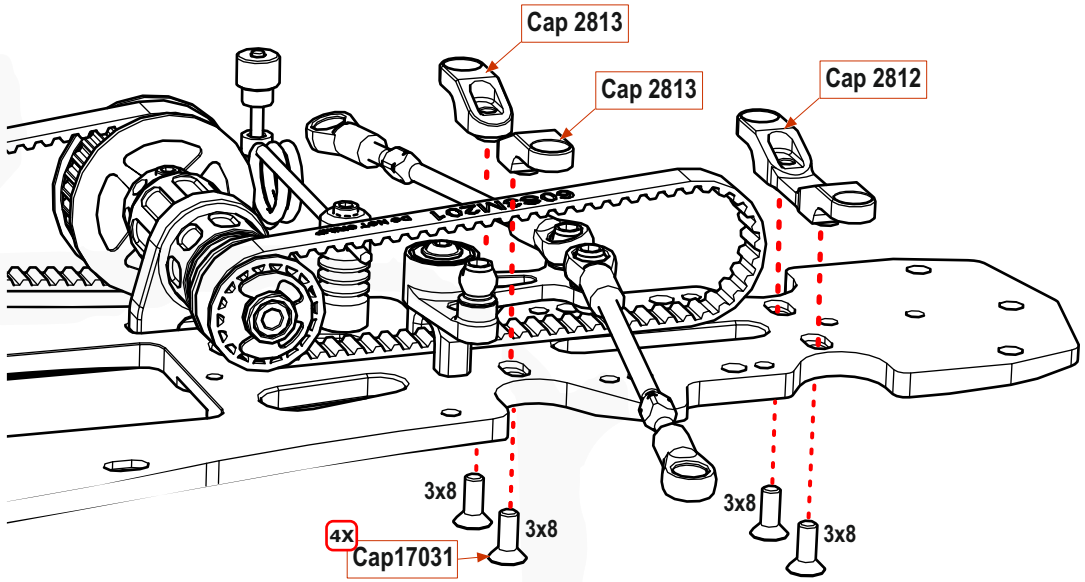

BAG Q - STEP 15.1

Front Transmission

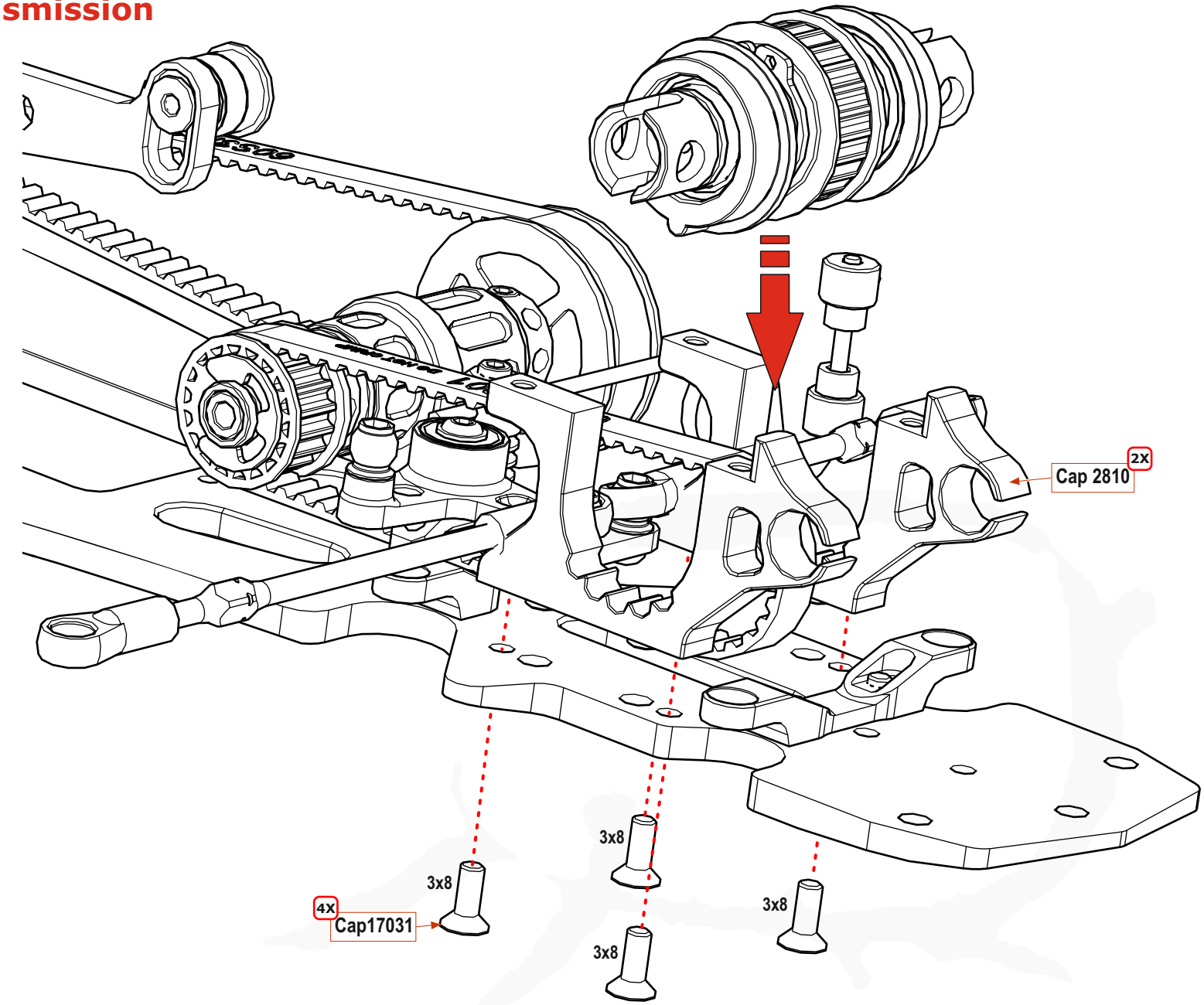

Front Transmission

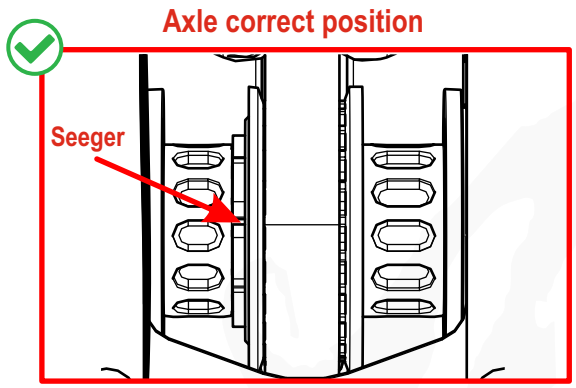

Adjust the front belt tension with the same value on both part !!!

Check the front axle play (between 0,1 - 0,2 mm)

Front Suspensions

Simmetrical Assembly X2

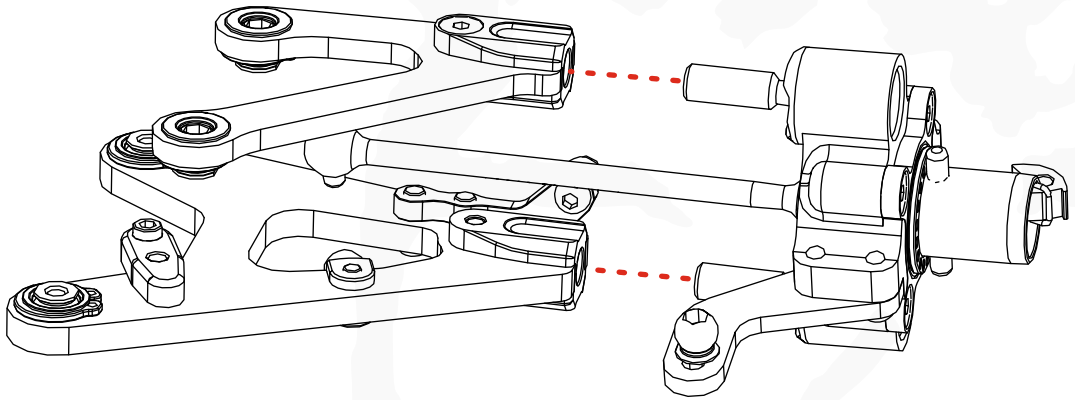

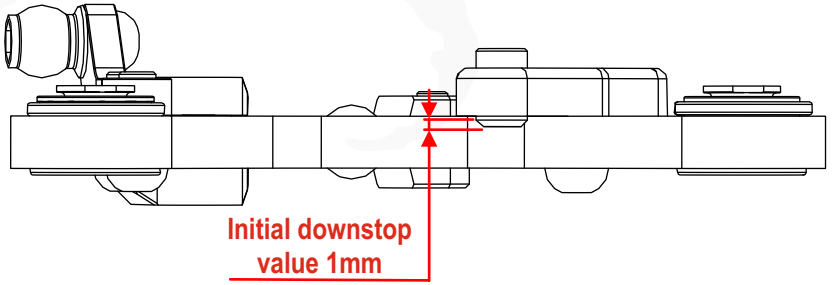

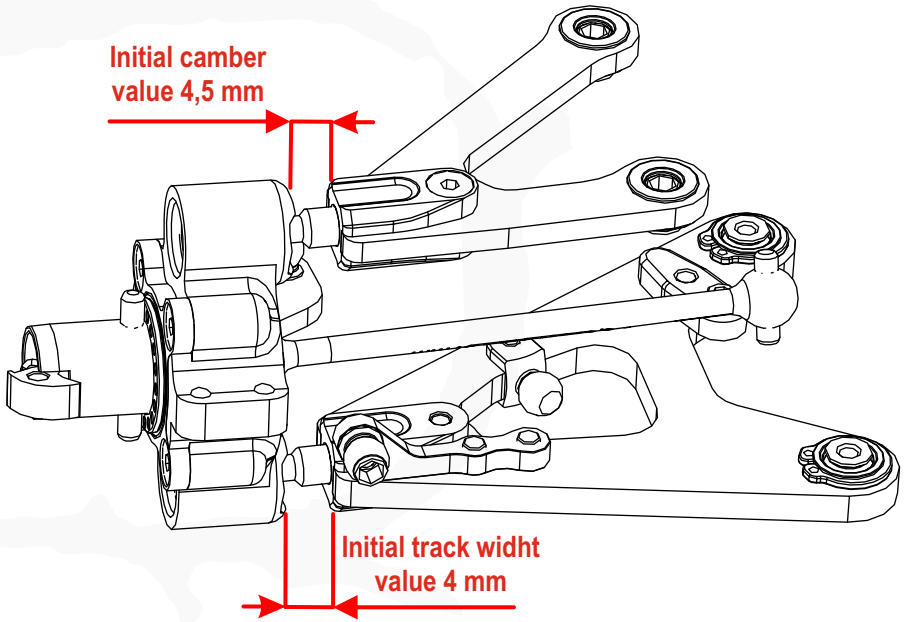

Front Suspensions

Simmetrical Assembly X2

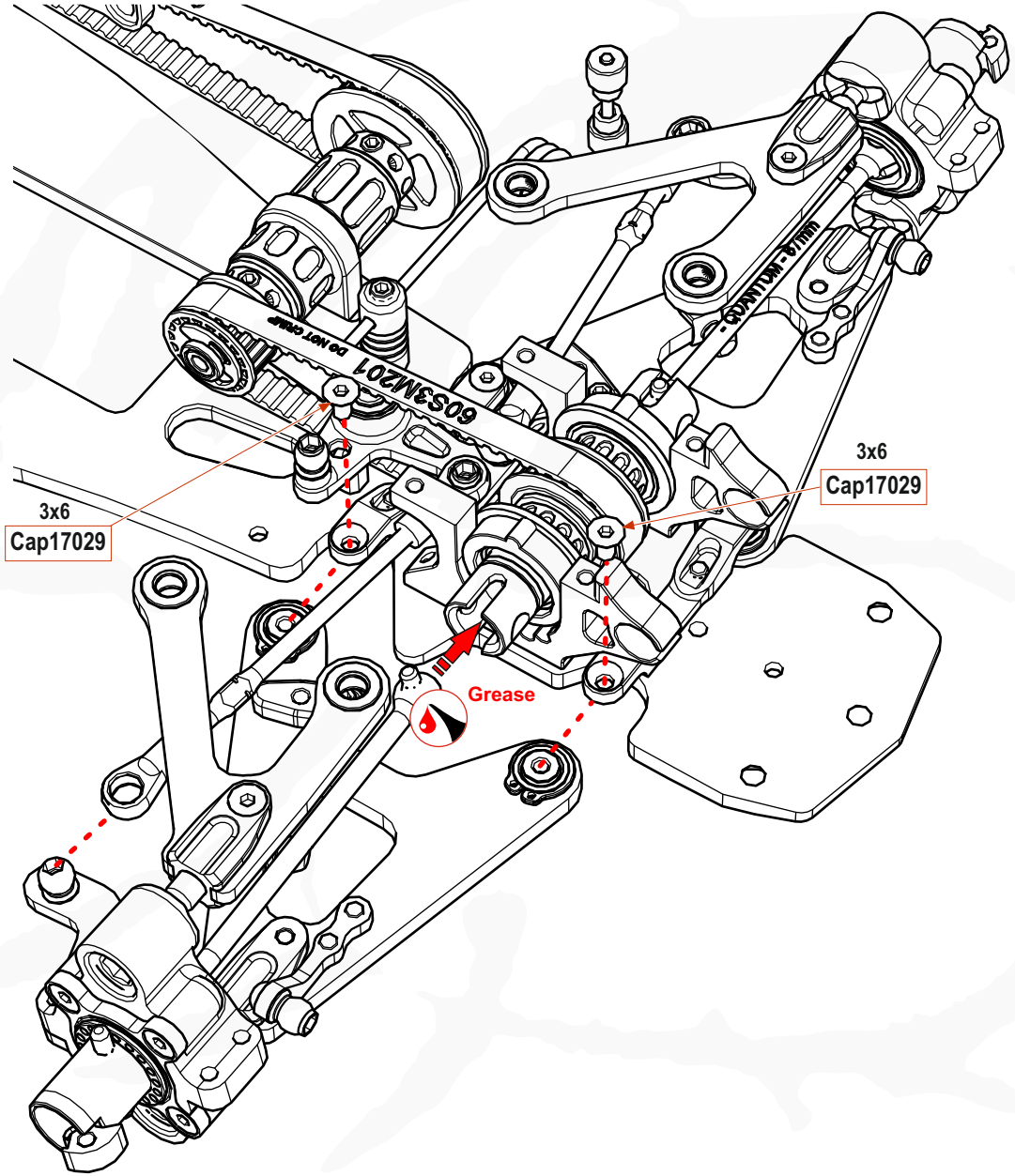

Front Suspensions

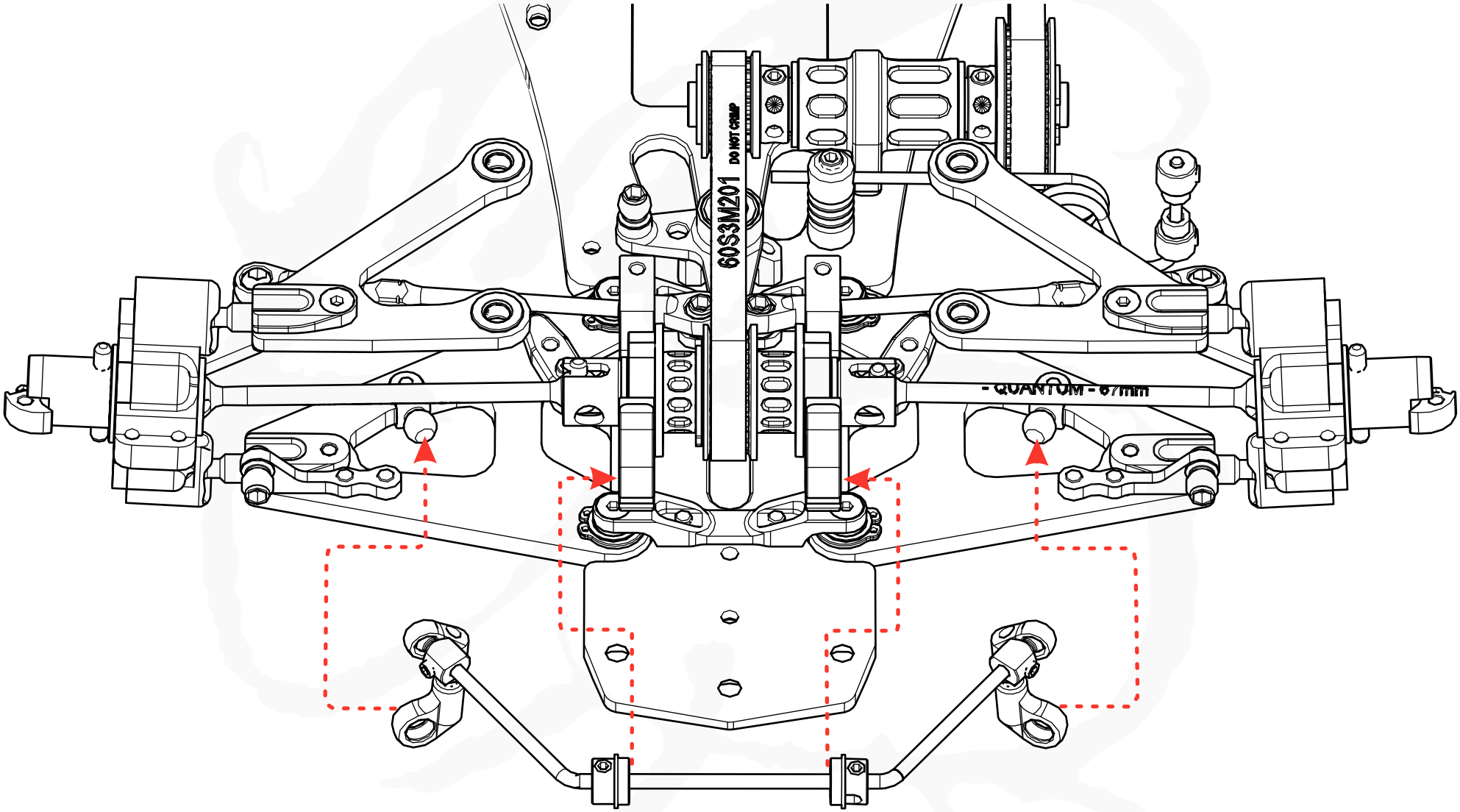

Adjust the Sway bar with the same lenght on both parts!!!

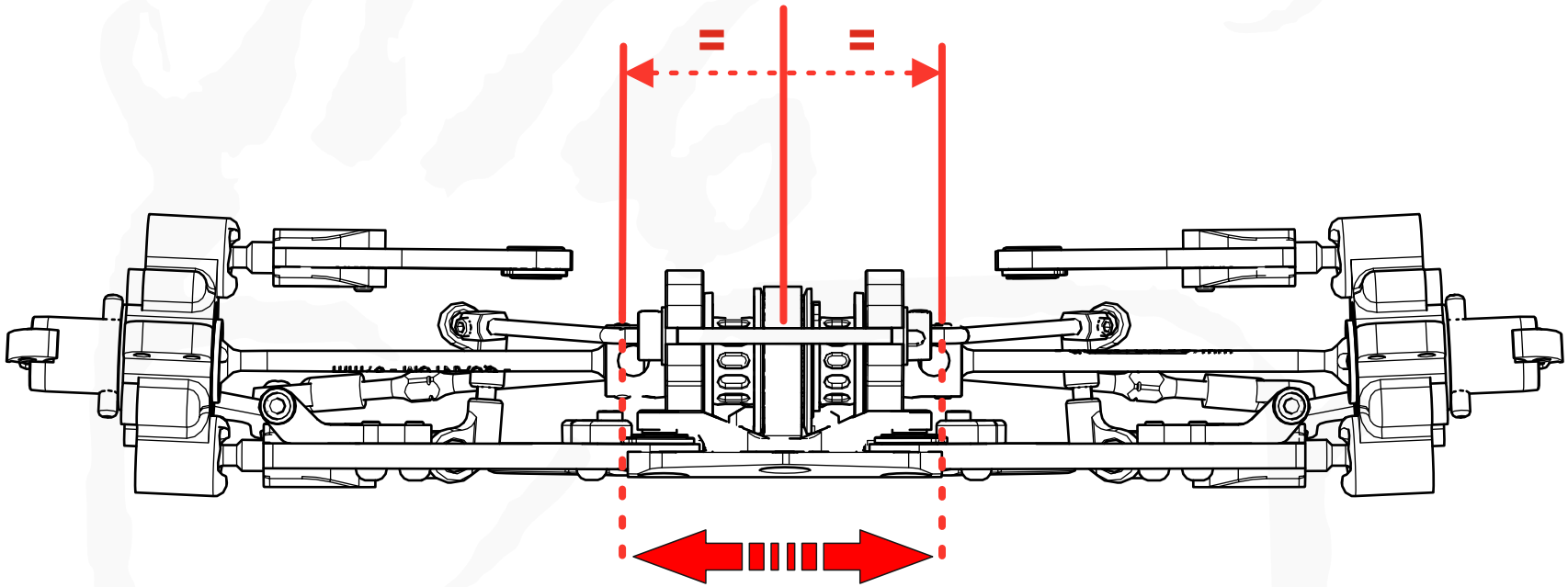

Adjust the play of sway bar between 0,1- 0,2 mm.

Front Suspensions

Initial caster positions

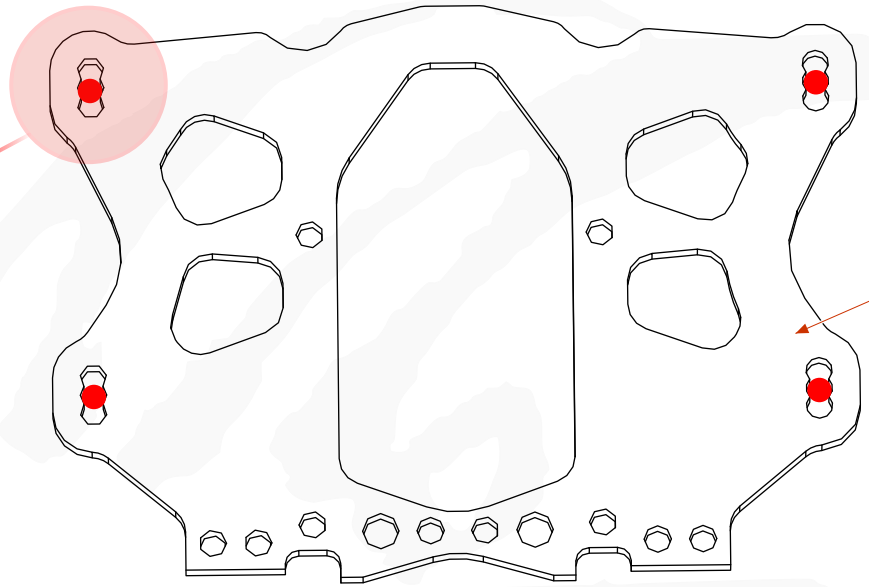

Adjust the caster with the same position on both part !!!

Caster positions

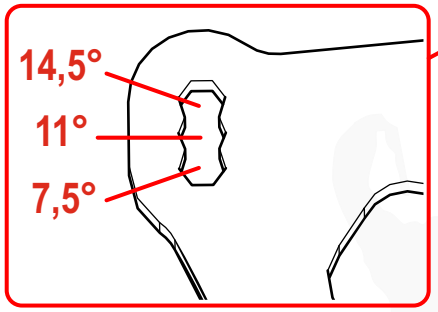

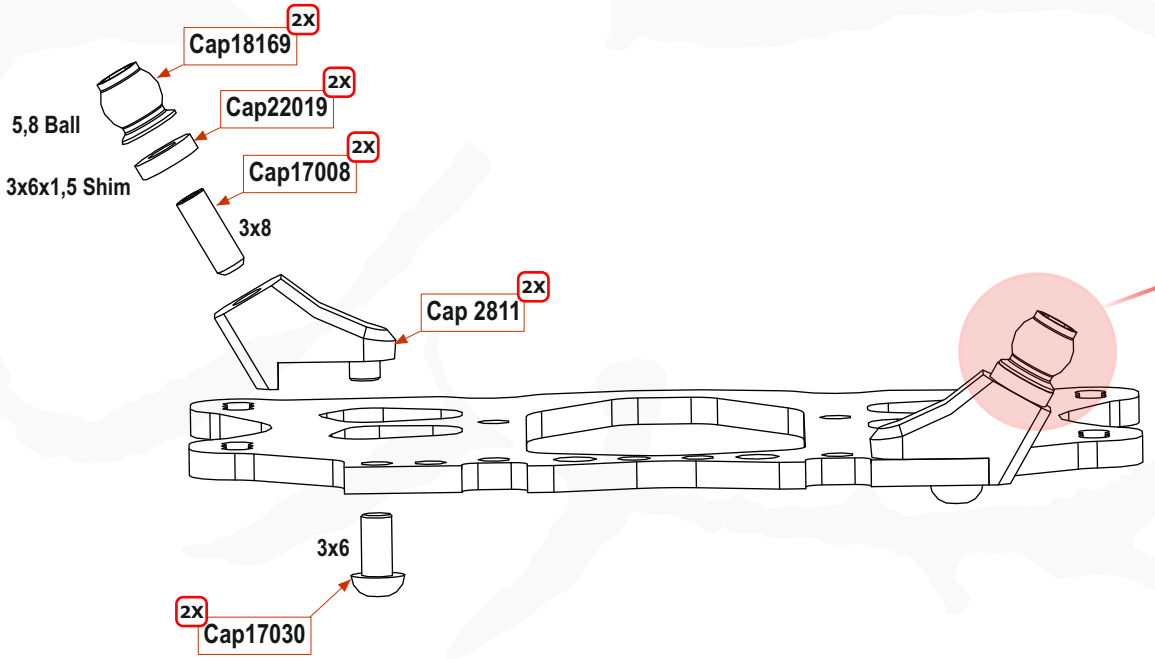

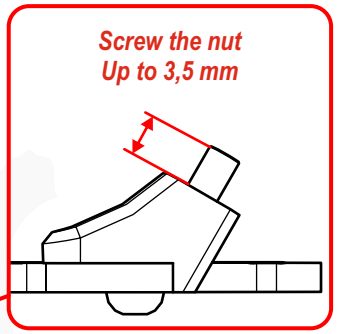

Front Suspensions

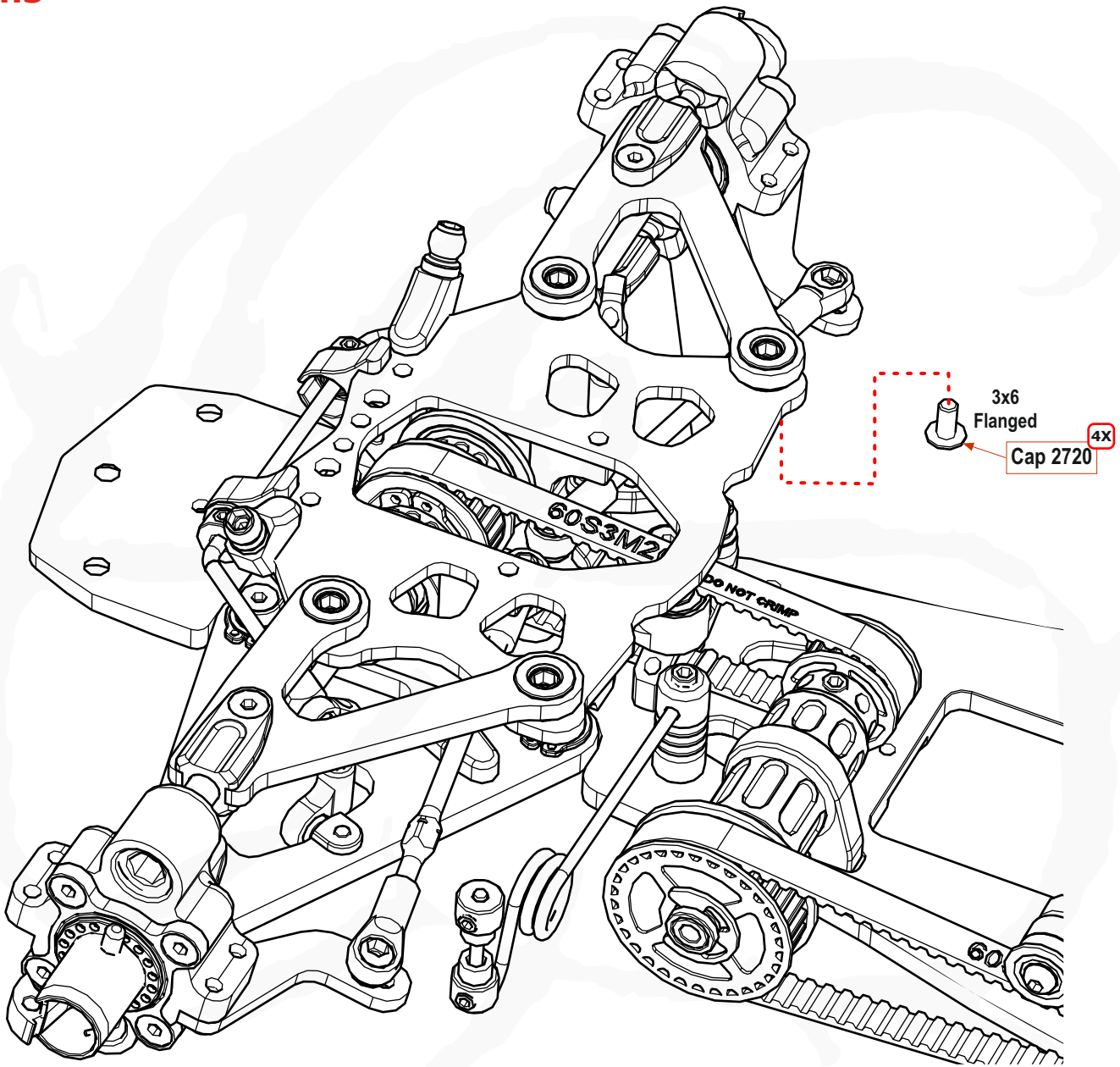

Front Suspensions

Simmetrical Assembly X2

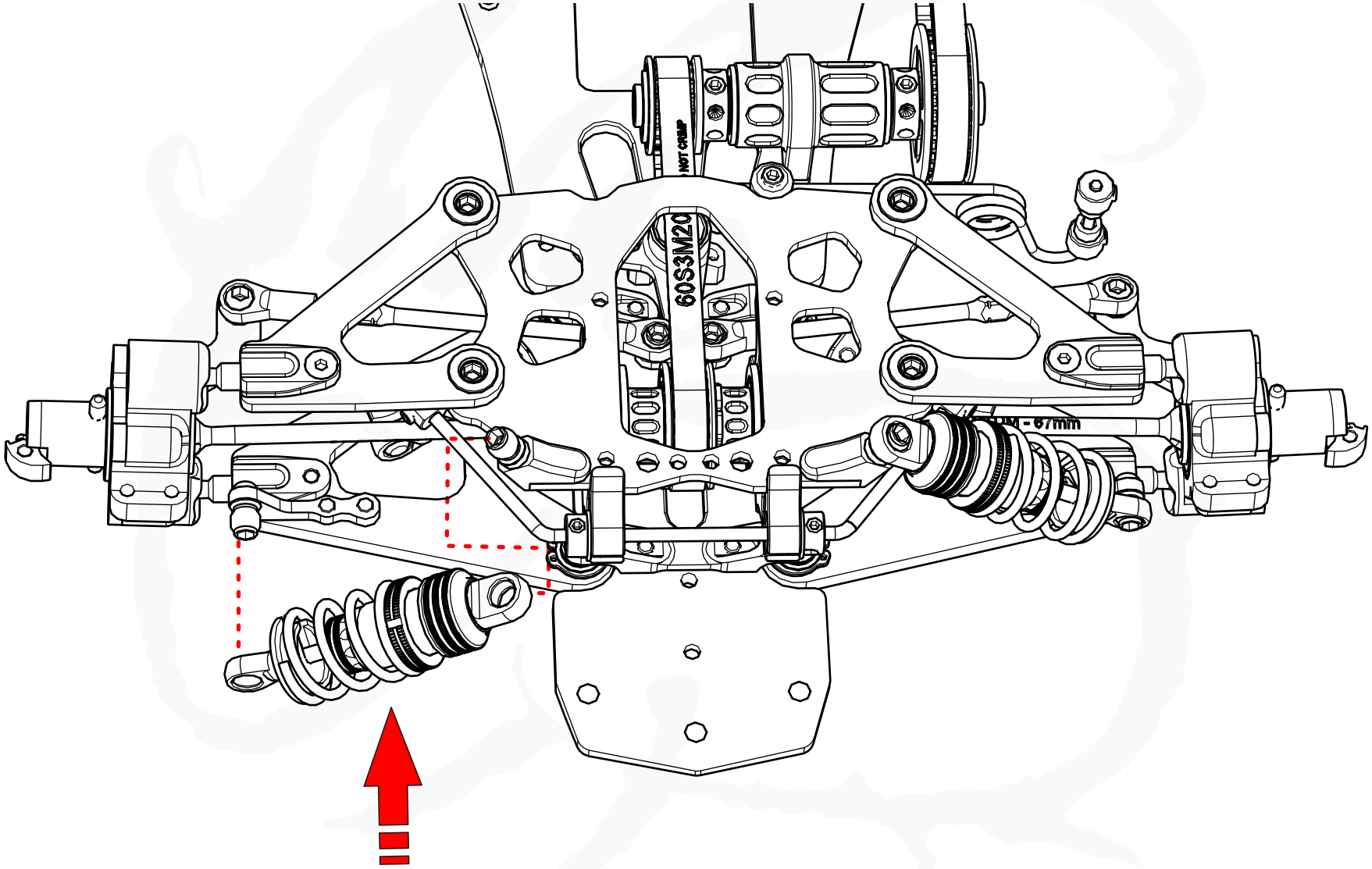

BAG S - STEP 17.0

Upper Deck

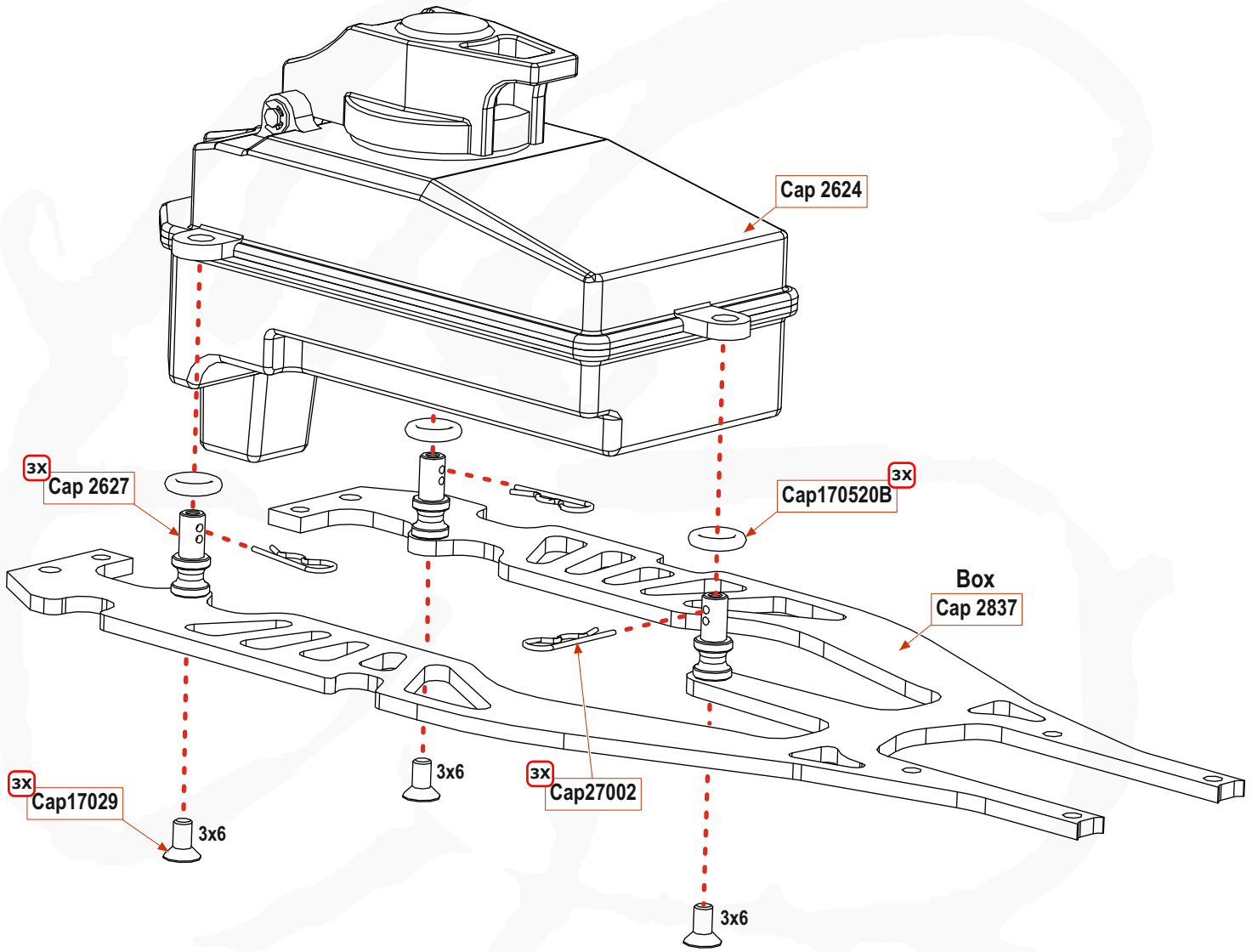

Upper Deck

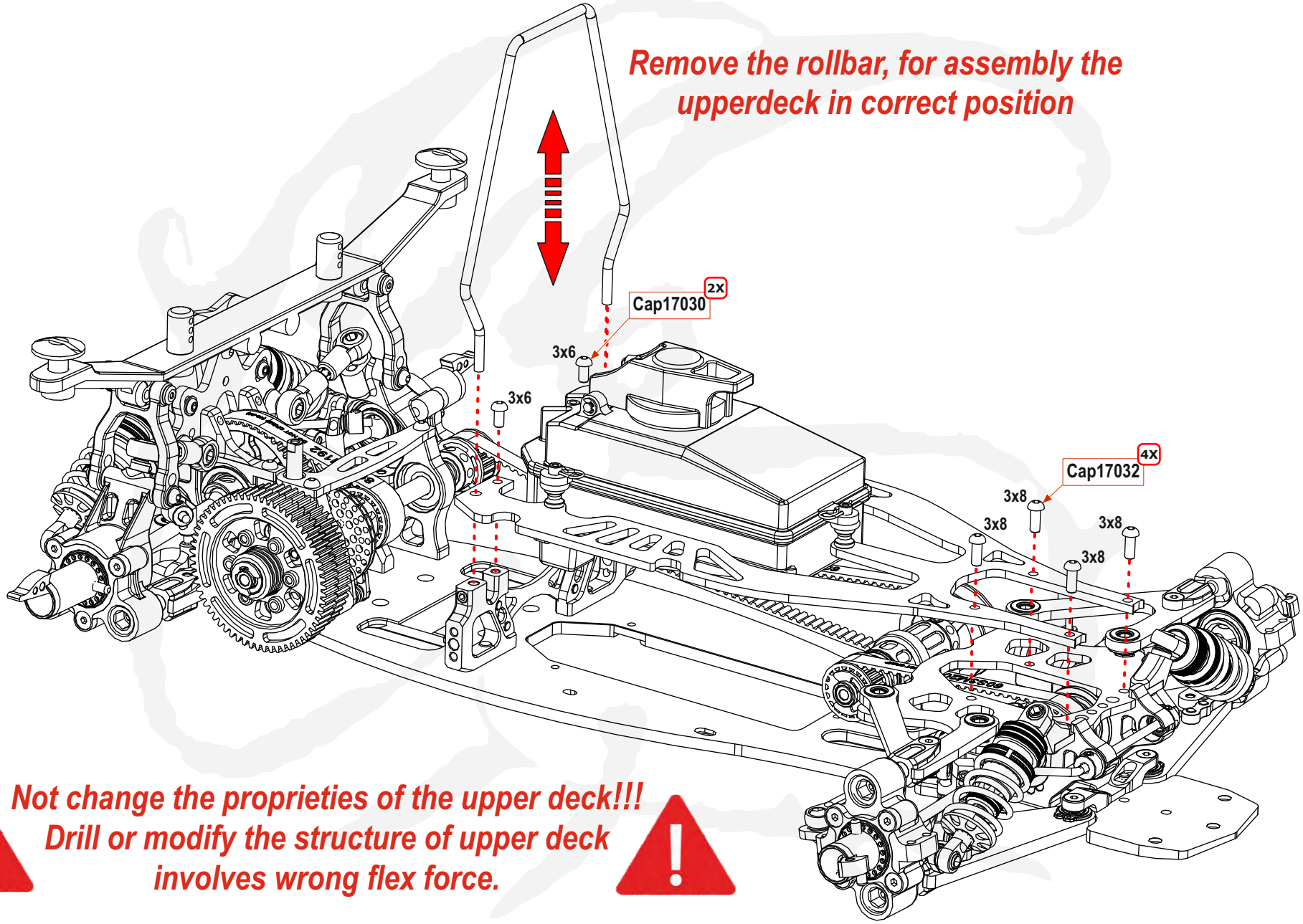
Remove the rollbar, for assembly the upperdeck in correct position
Cap17030
2x
3x6
3x6
Cap17032
4x
3x8
3x8
3x8
3x8
Not change the proprieties of the upper deck!!!
Drill or modify the structure of upper deck involves wrong flex force.

Bumper

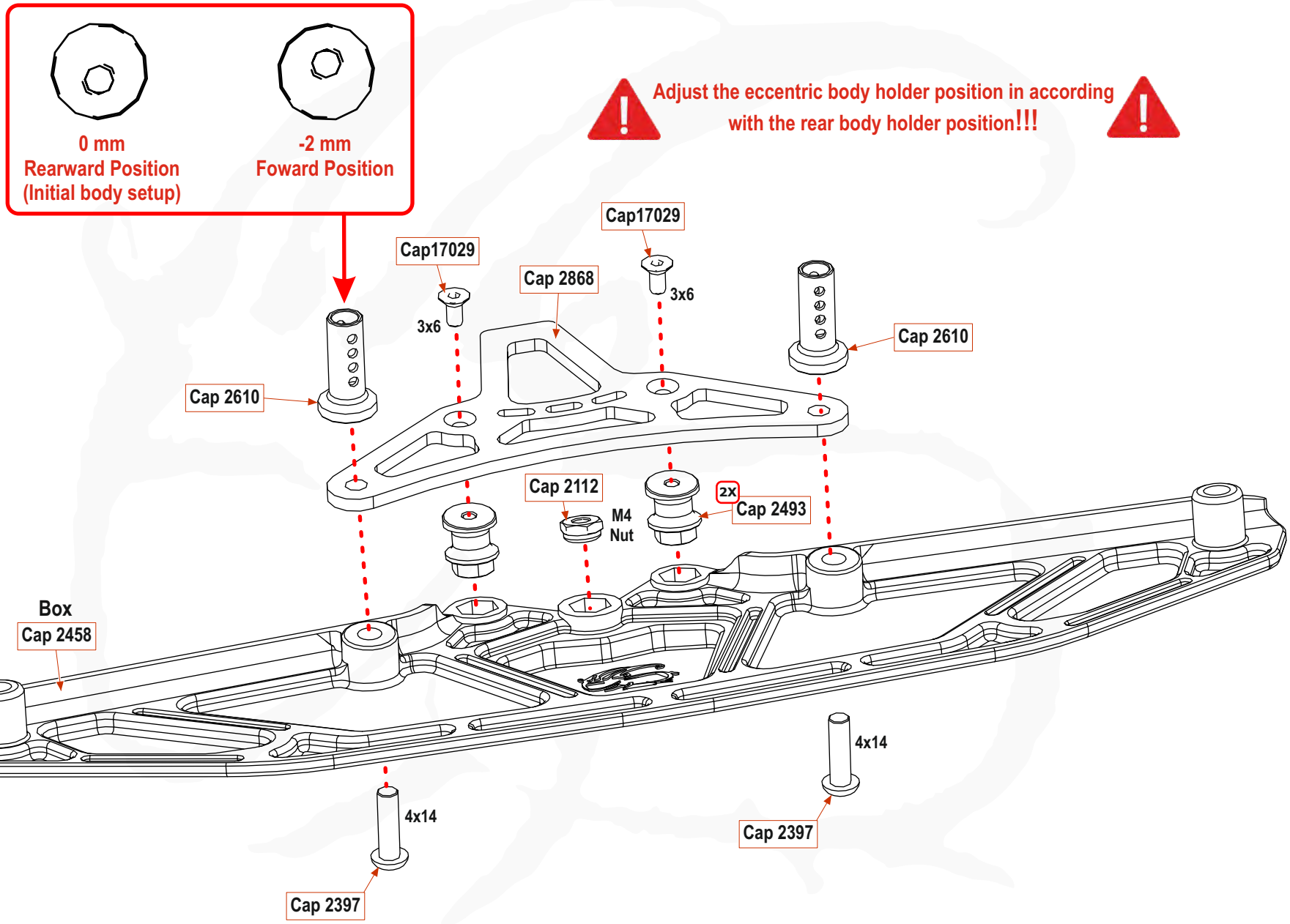
0 mm
Rearward Position
(Initial body setup)
-2 mm
Foward Position
Adjust the eccentric body holder position in according with the rear body holder position!!!
Cap17029
Cap17029
3x6
Cap 2868
3x6
Cap 2610
Cap 2610
Cap 2112
M4
Nut
2x
Cap 2493
Box
Cap 2458
4x14
Cap 2397
4x14
Cap 2397

BAG T - STEP 18.1

Bumper

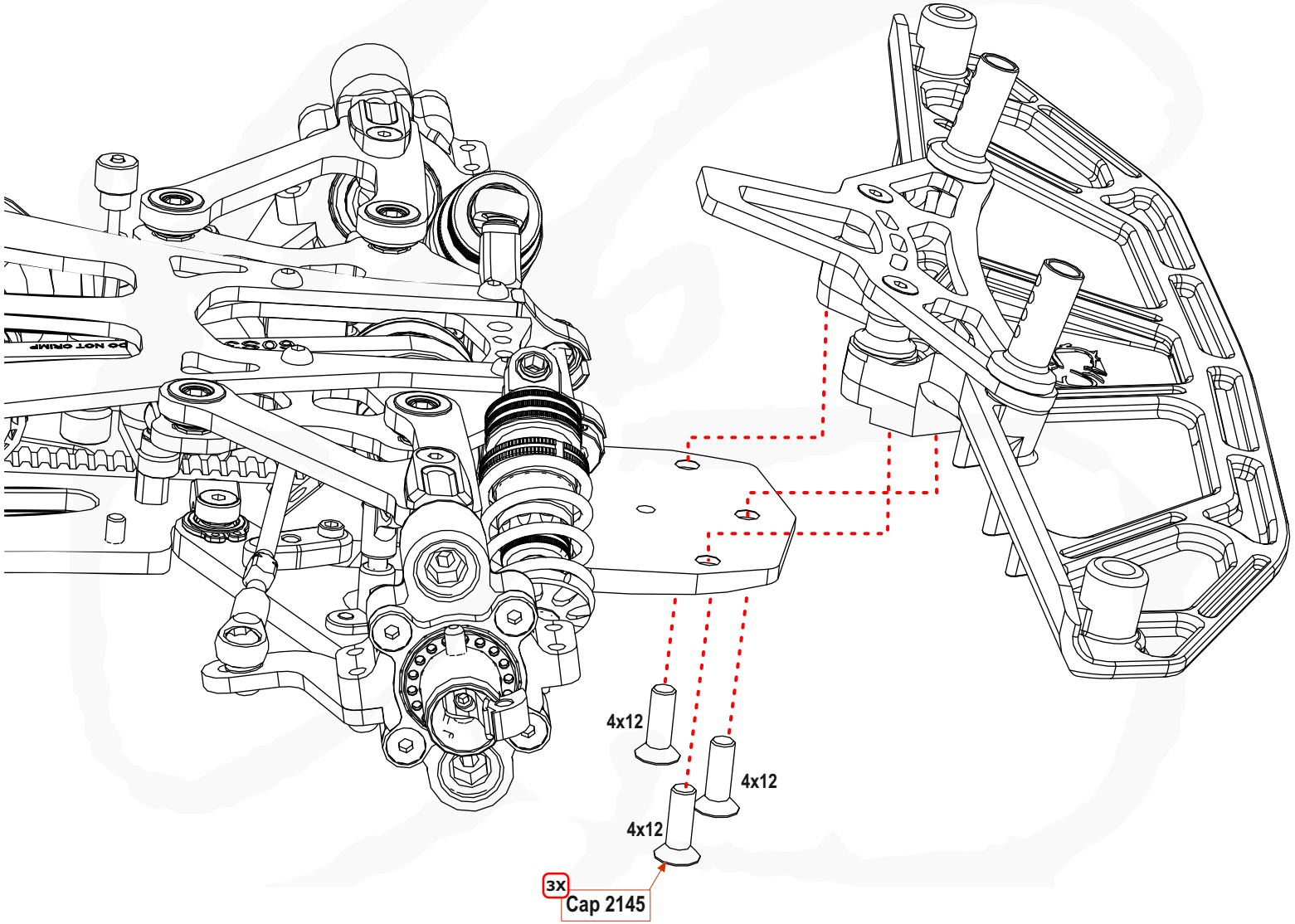

BAG U - STEP 19.0

Radio tray

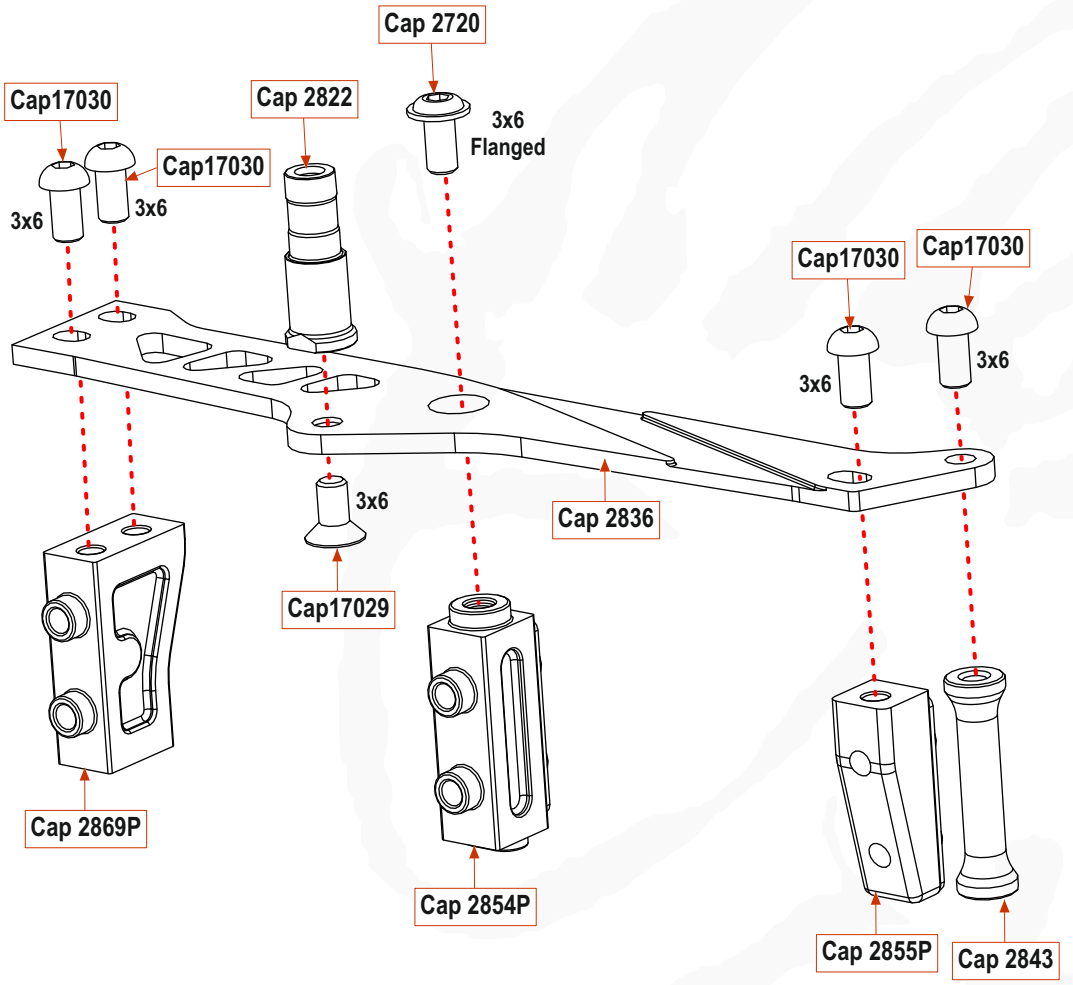

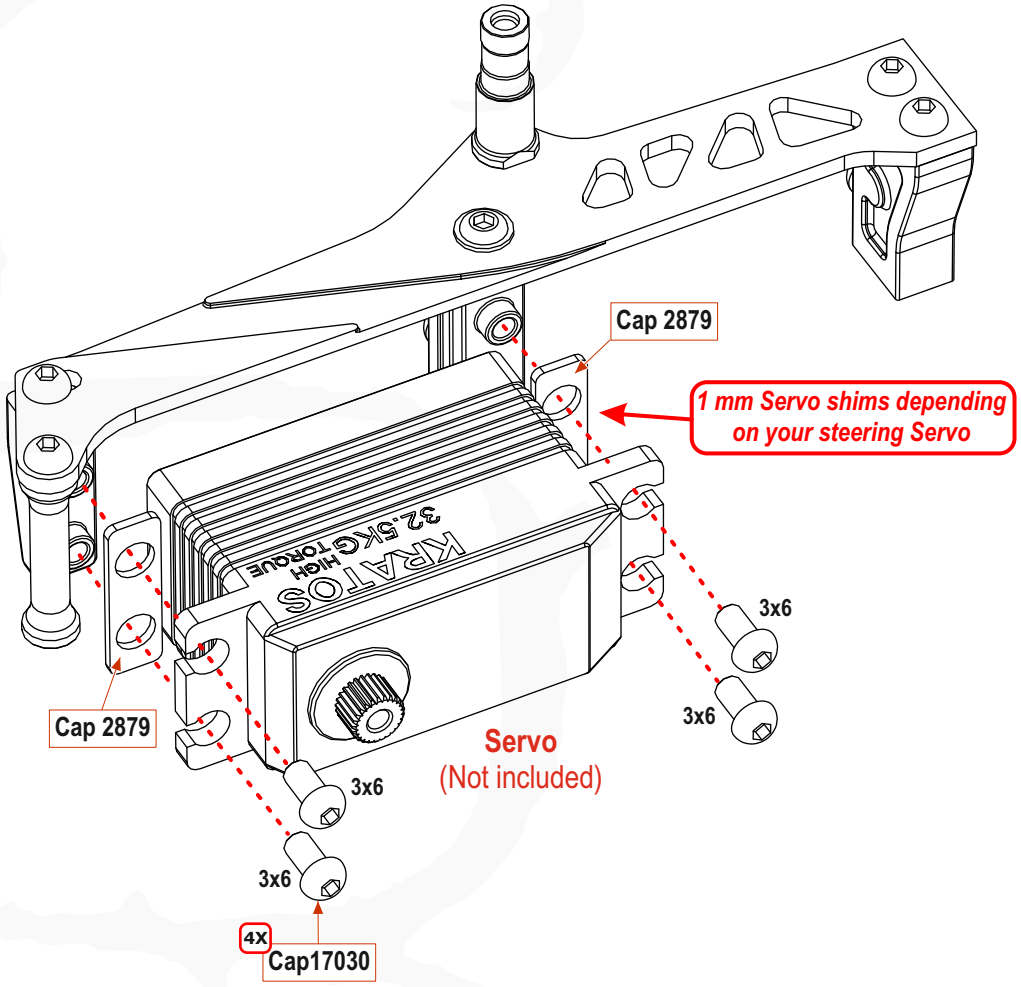

Radio tray

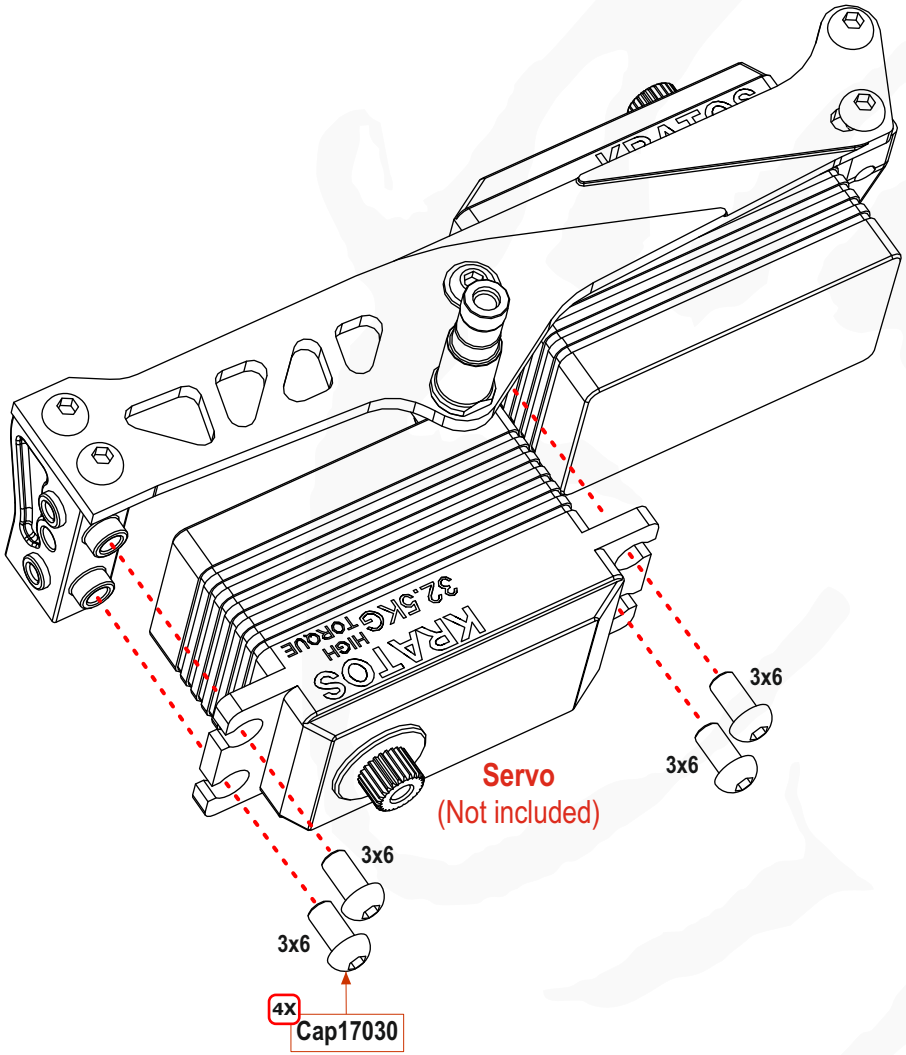
KRATOS
32.5KG HIGH TORQUE
3x6
3x6
3x6
3x6
4X
Cap17030
Servo
(Not included)

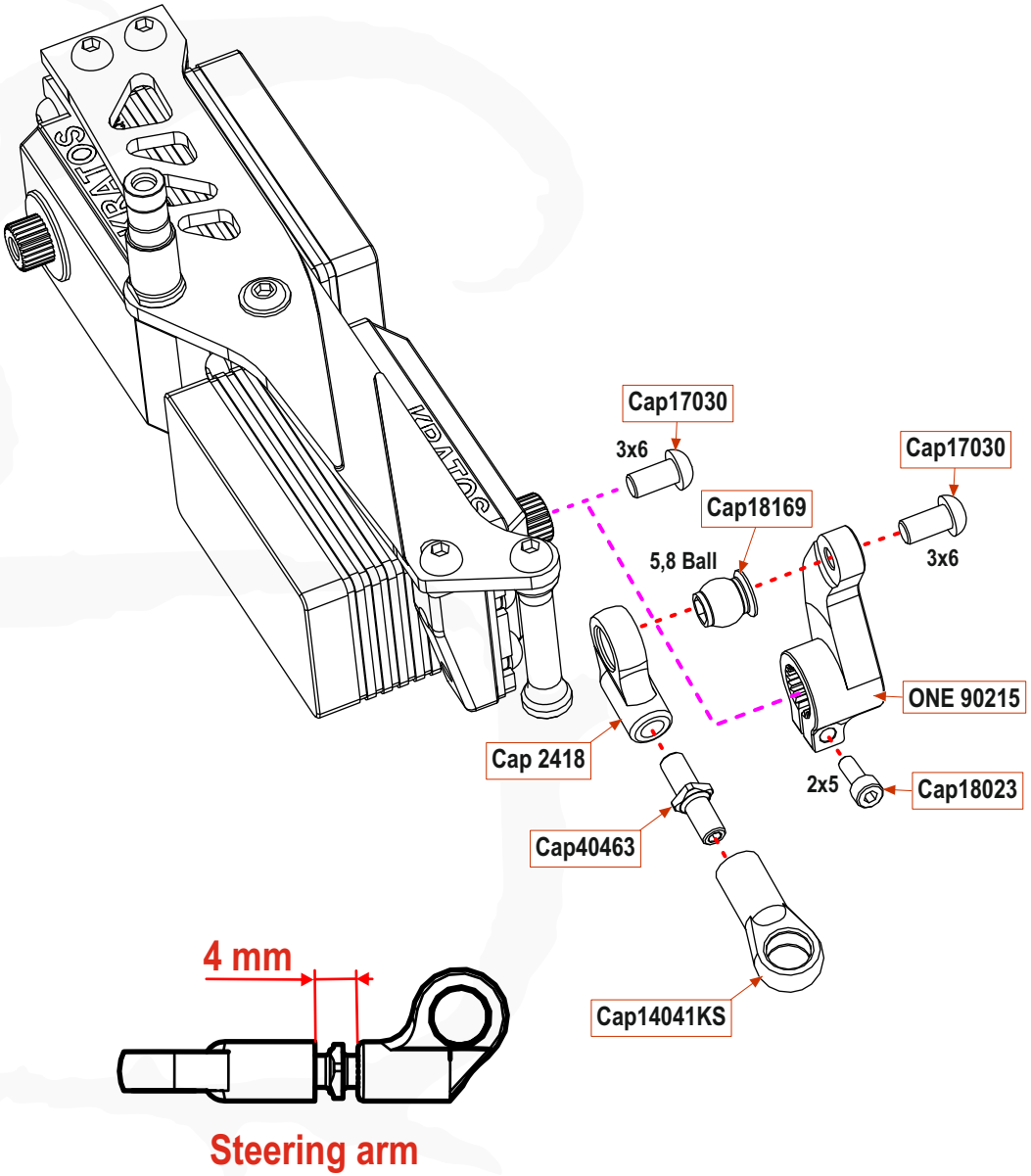
KRATOS
Cap17030
3x6
Cap18169
5,8 Ball
Cap17030
3x6
ONE 90215
Cap 2418
2x5
Cap18023
Cap40463
Cap14041KS
4 mm
Steering arm

Radio tray

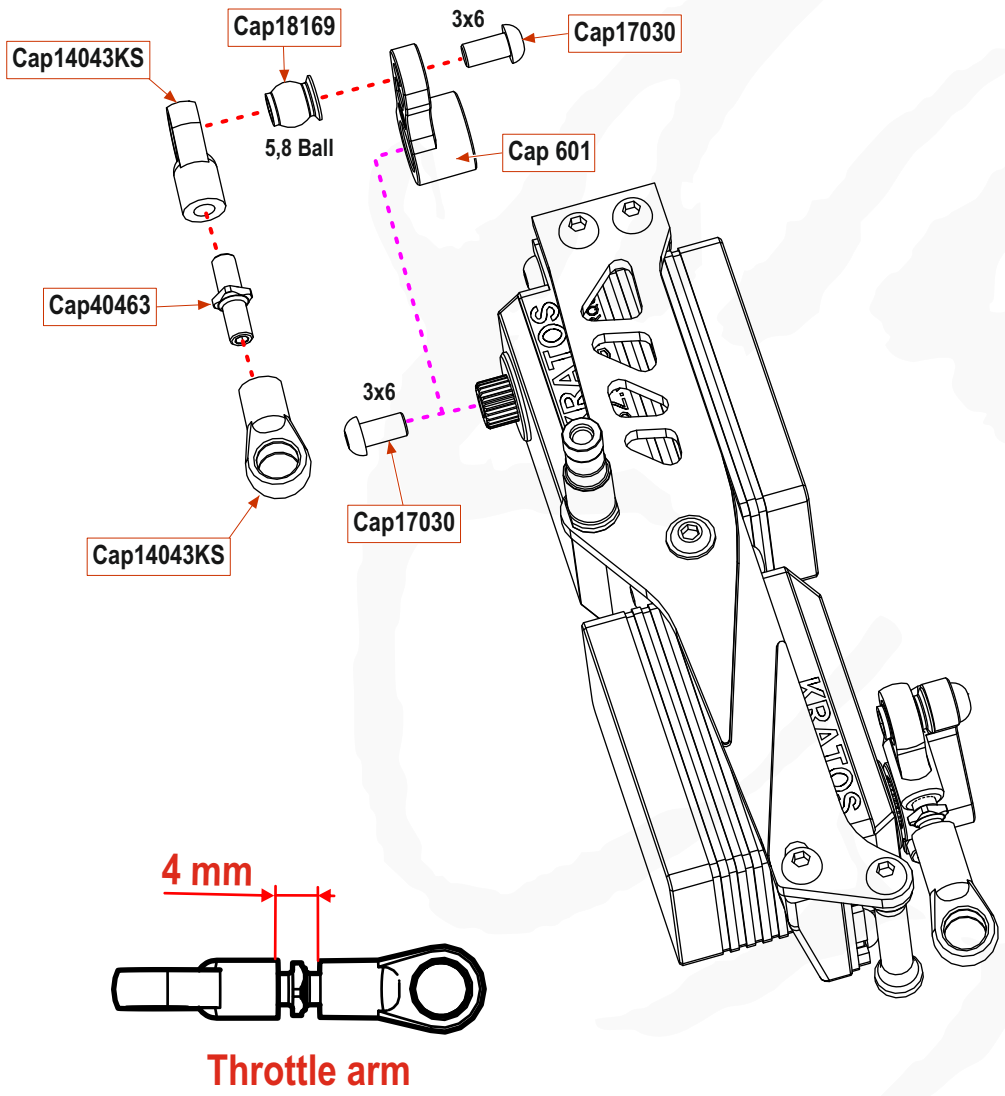

Throttle arm

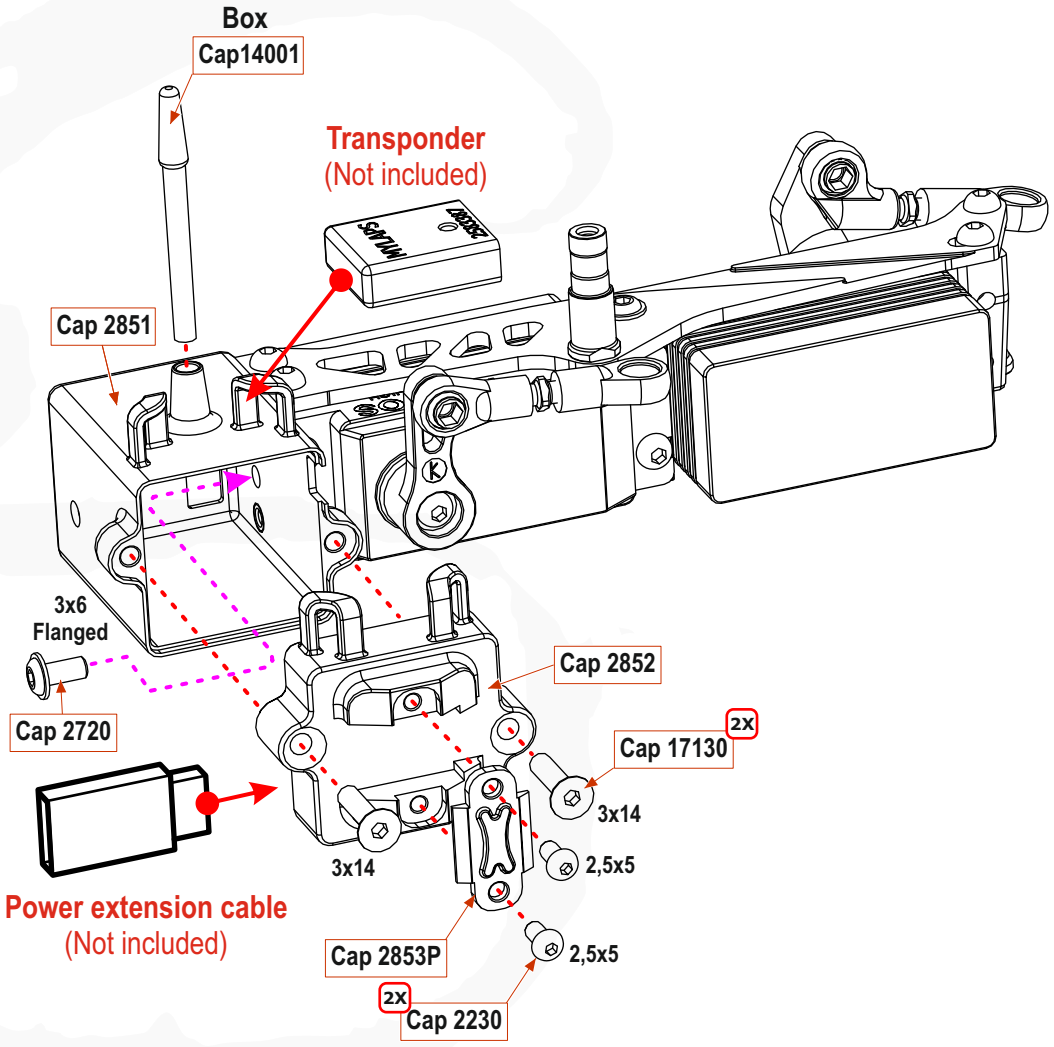

BAG U - STEP 19.3

Radio tray

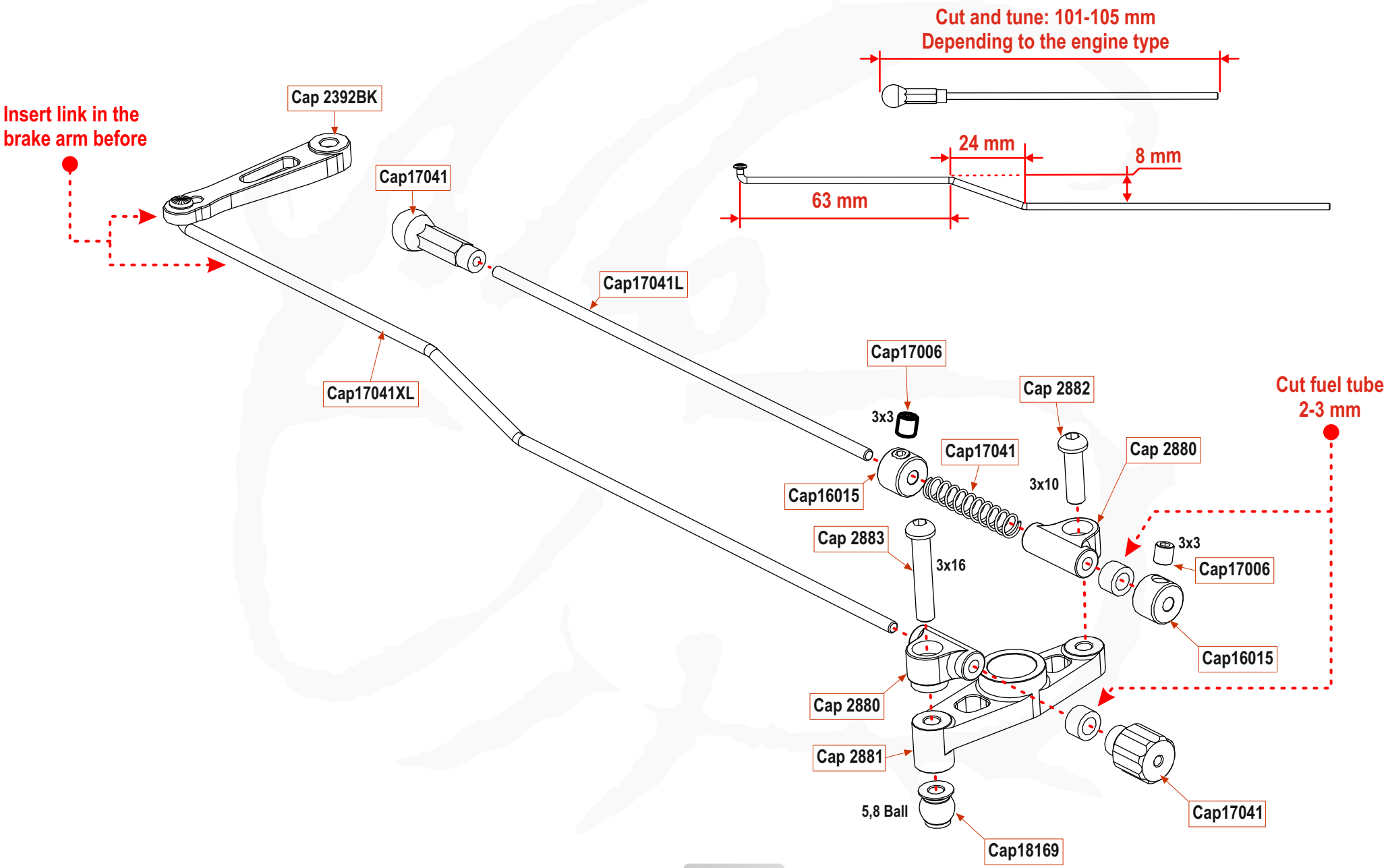

BAG U - STEP 19.4

Radio tray

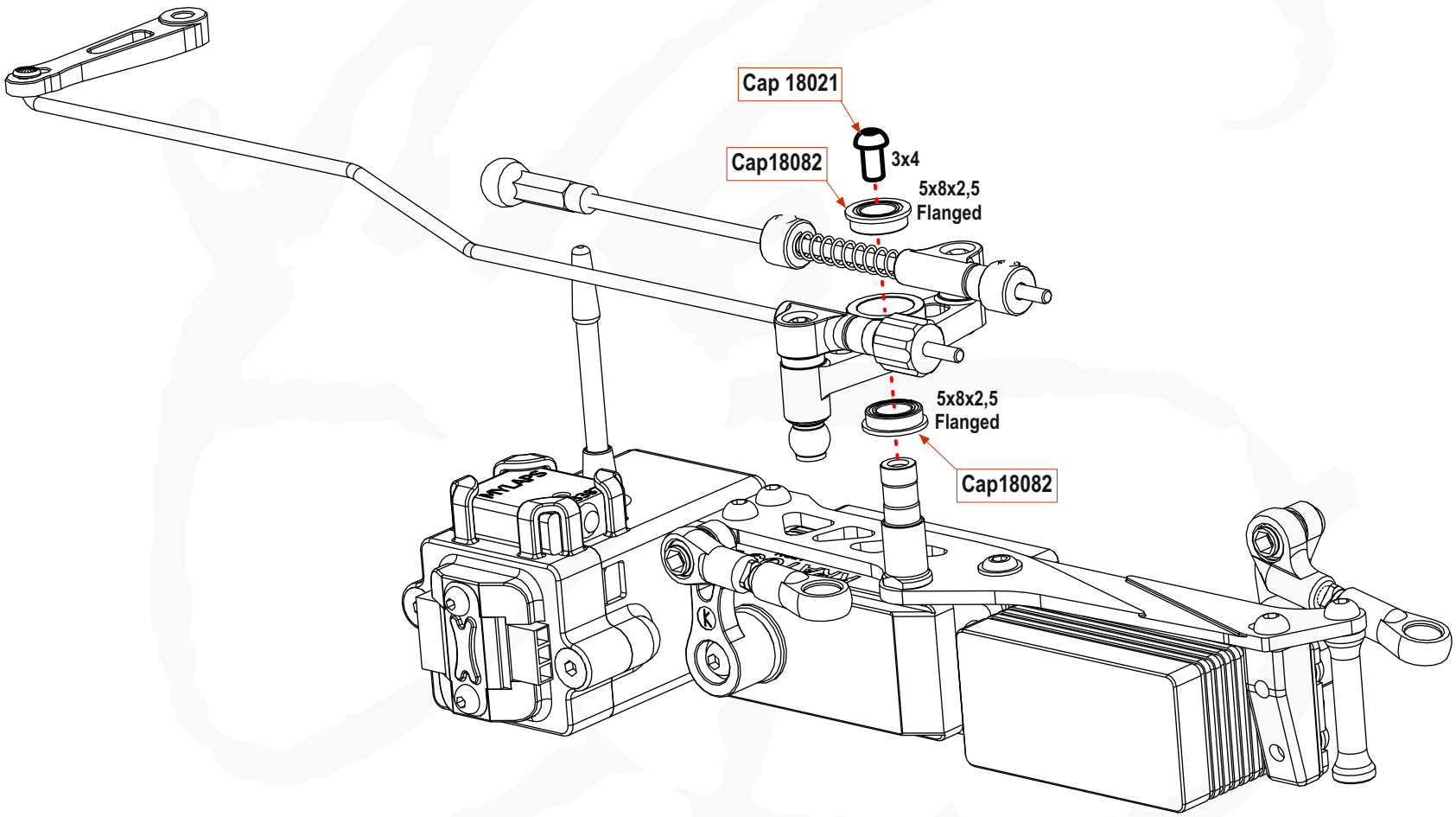

BAG U - STEP 19.5

Radio tray

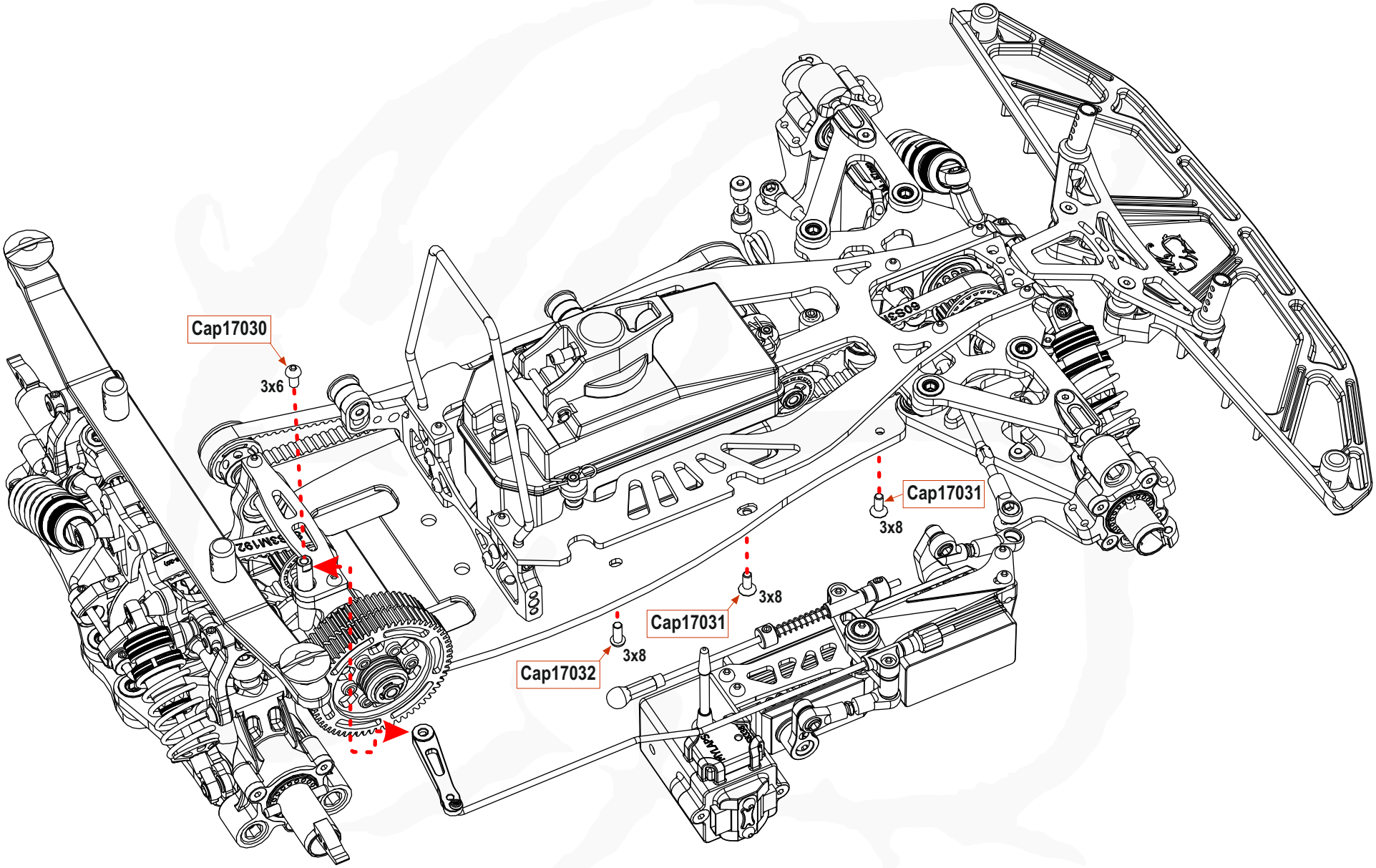

Radio tray

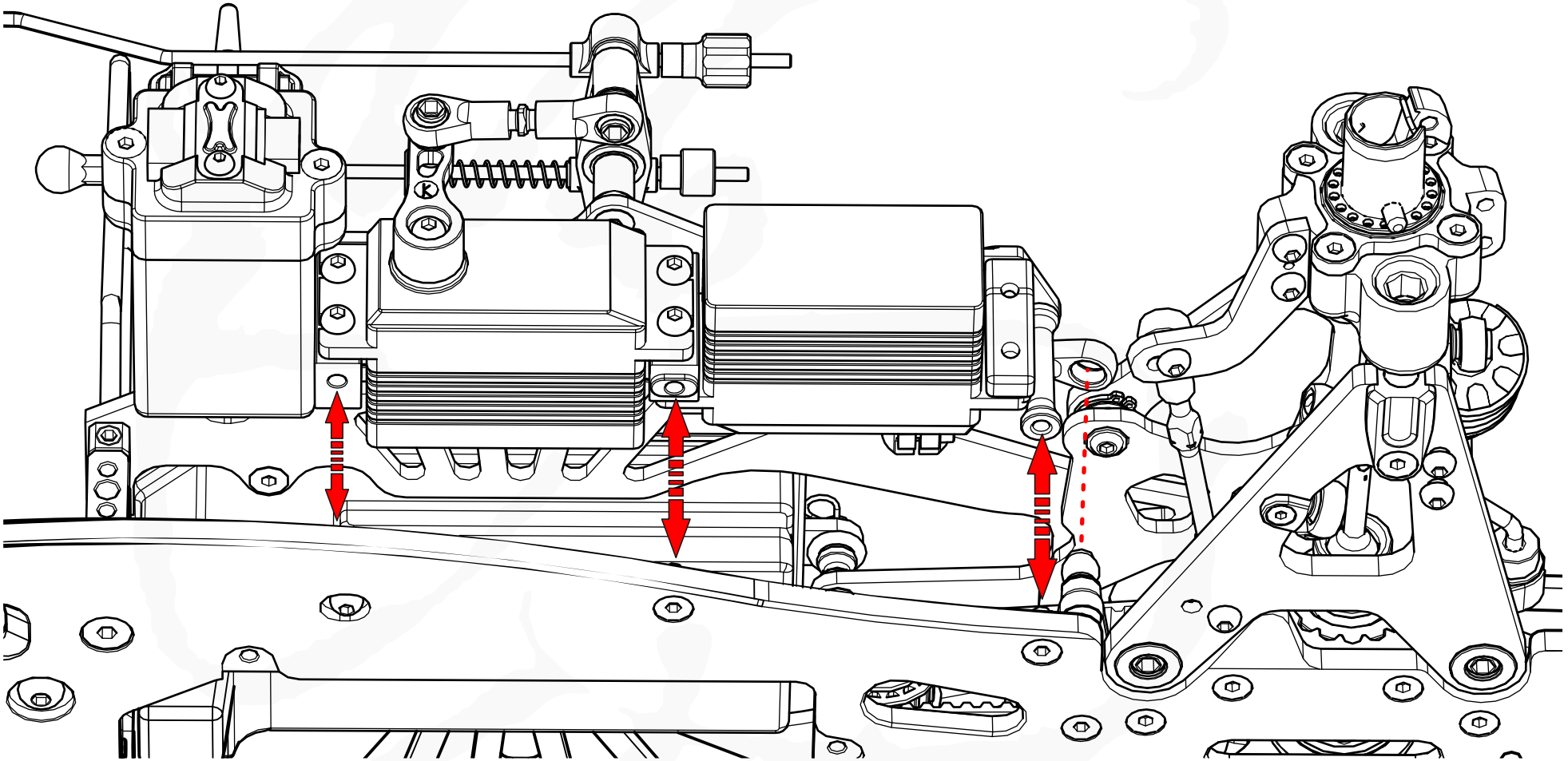

Radio tray

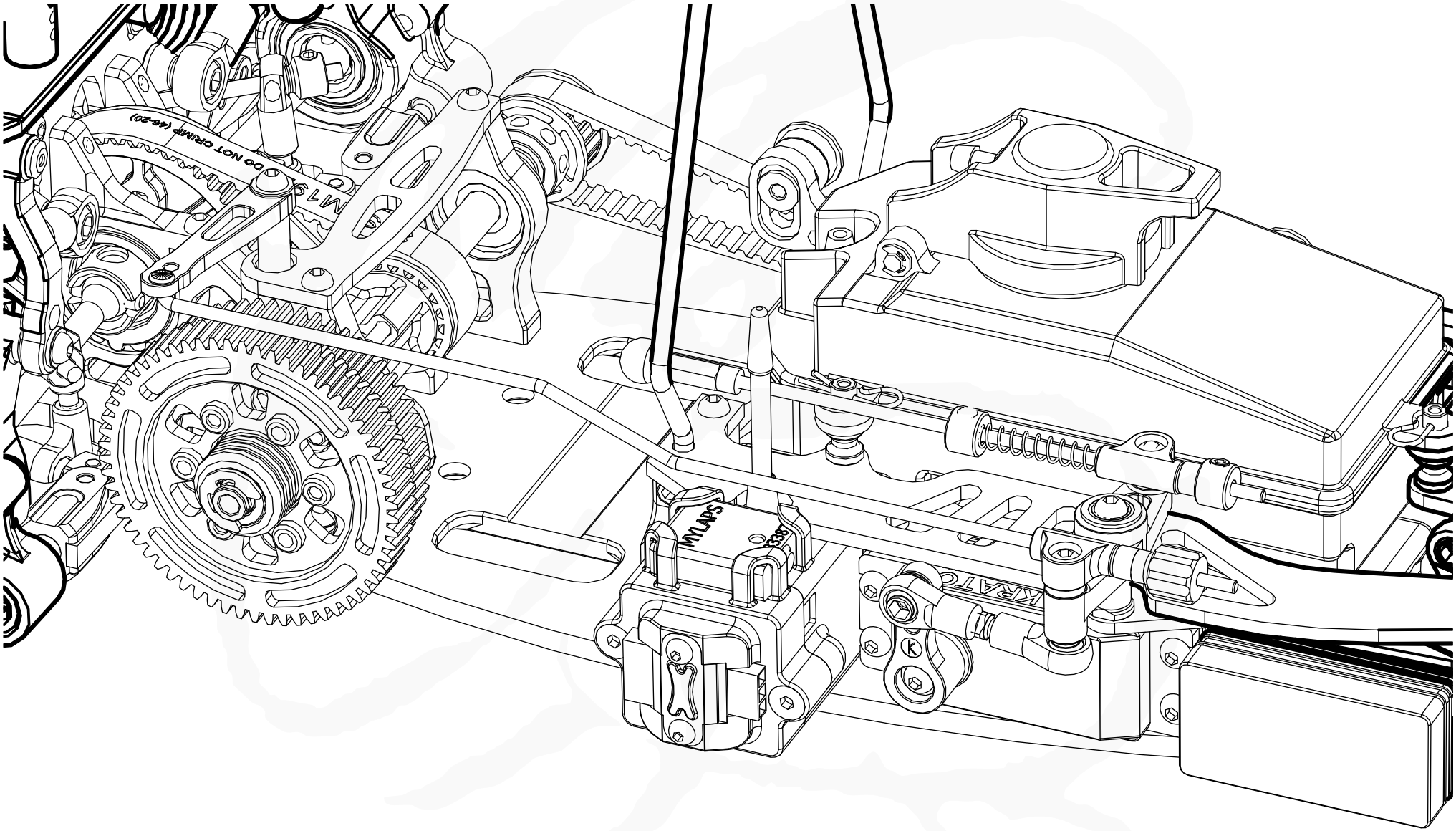

Radio tray

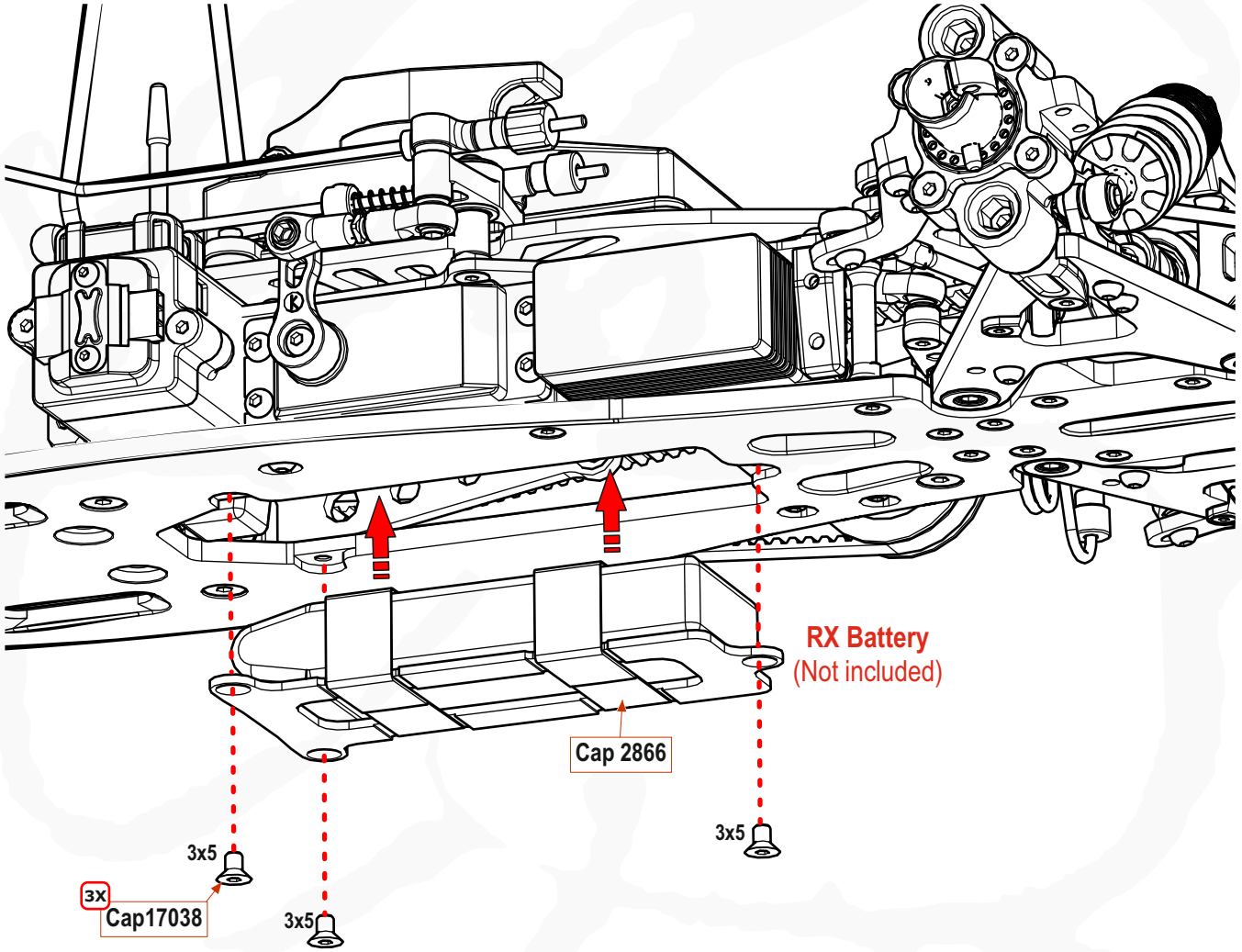

Clutch

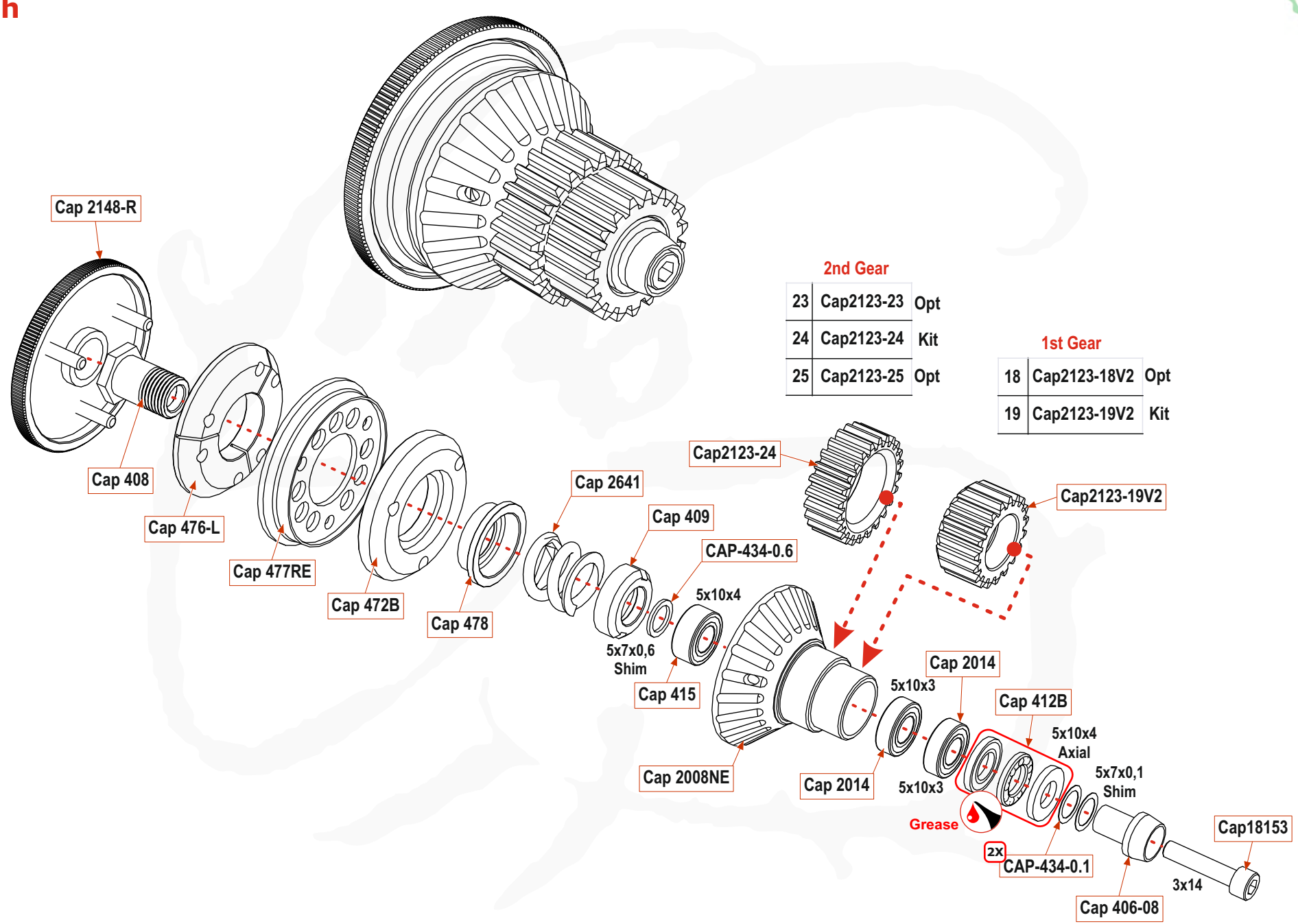

2nd Gear

23	Cap2123-23	Opt
24	Cap2123-24	Kit
25	Cap2123-25	Opt

1st Gear

18	Cap2123-18V2	Opt
19	Cap2123-19V2	Kit

Clutch

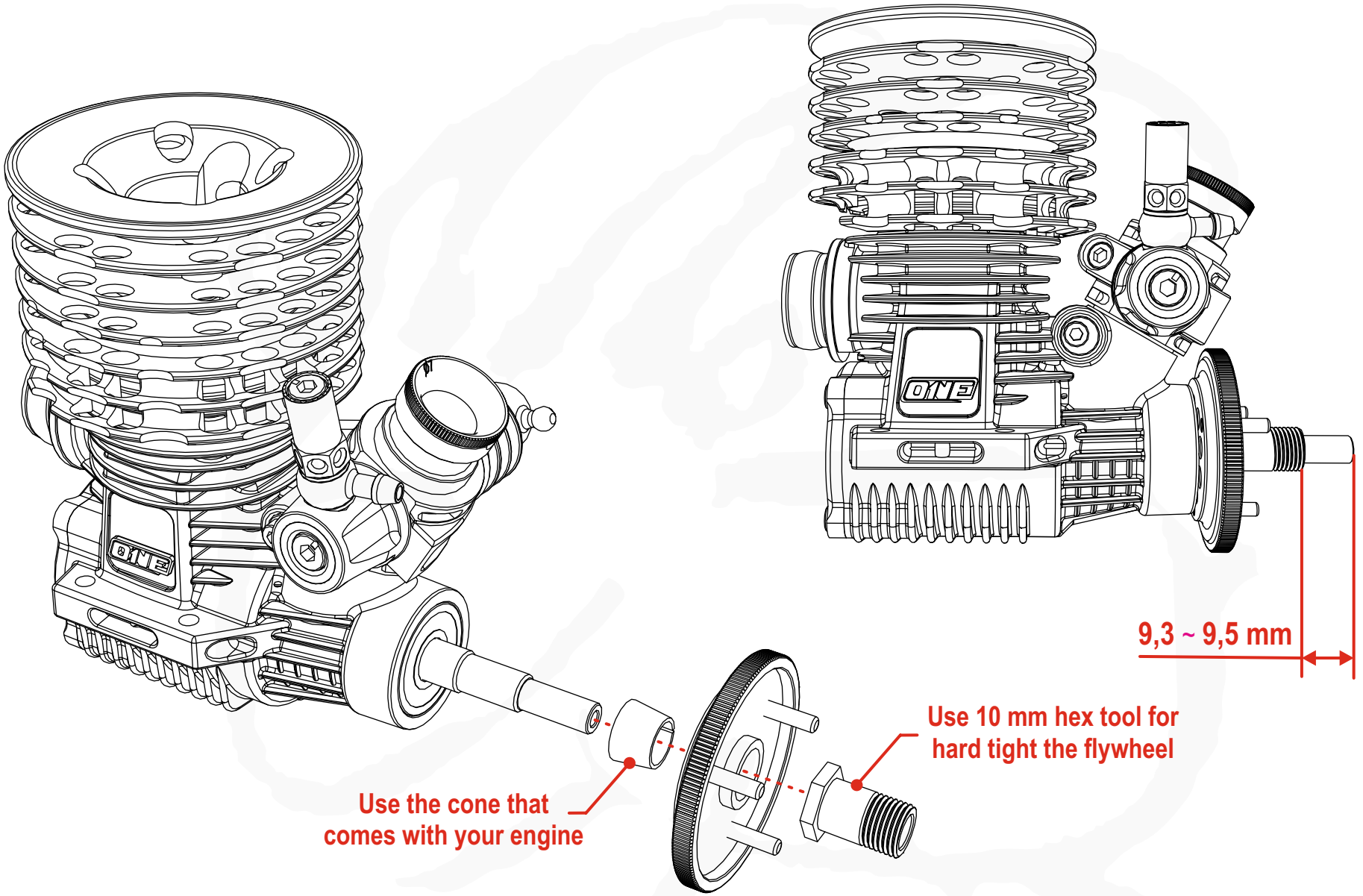
9,3 ~ 9,5 mm
Use 10 mm hex tool for
hard tight the flywheel
Use the cone that
comes with your engine

Clutch

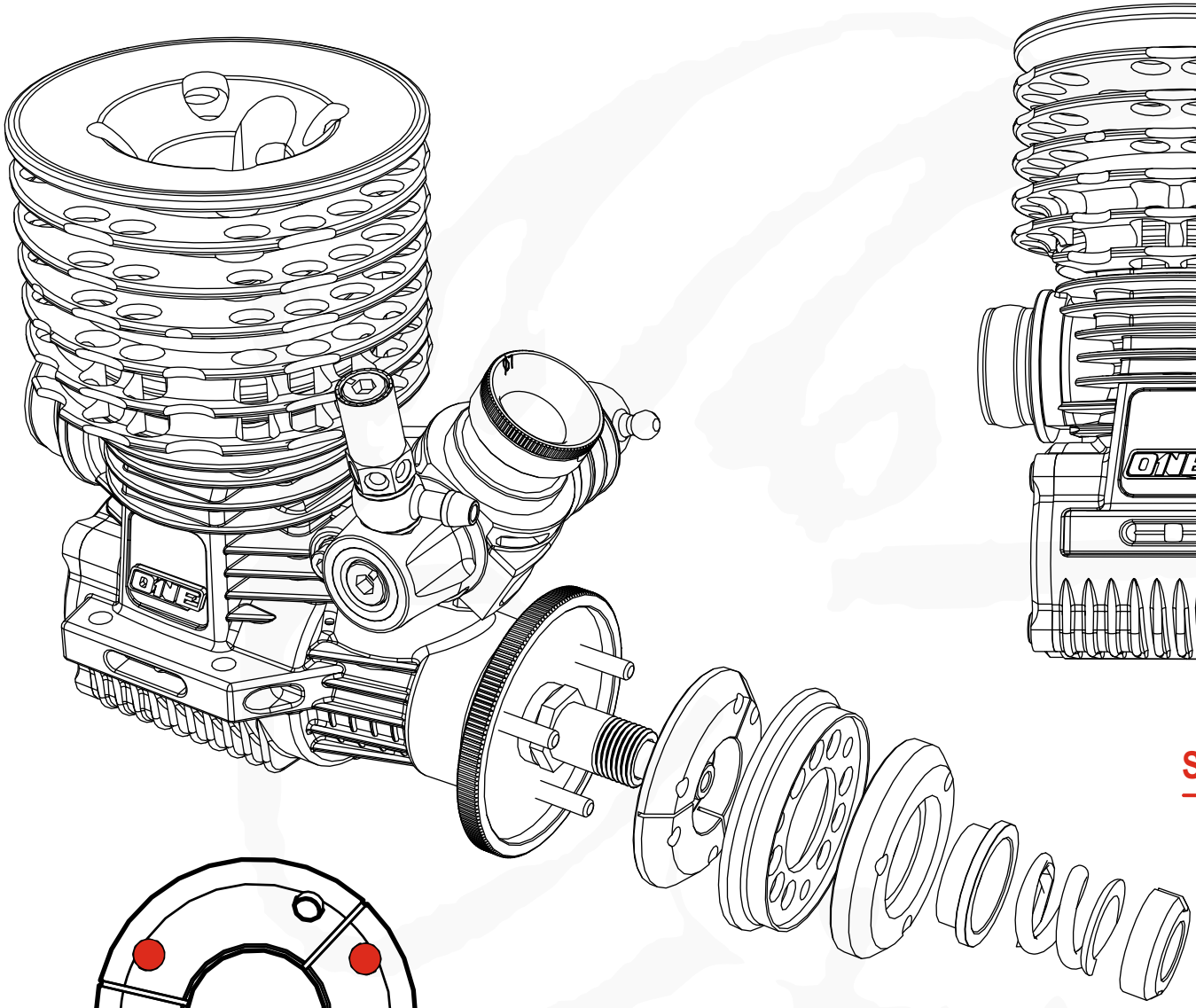

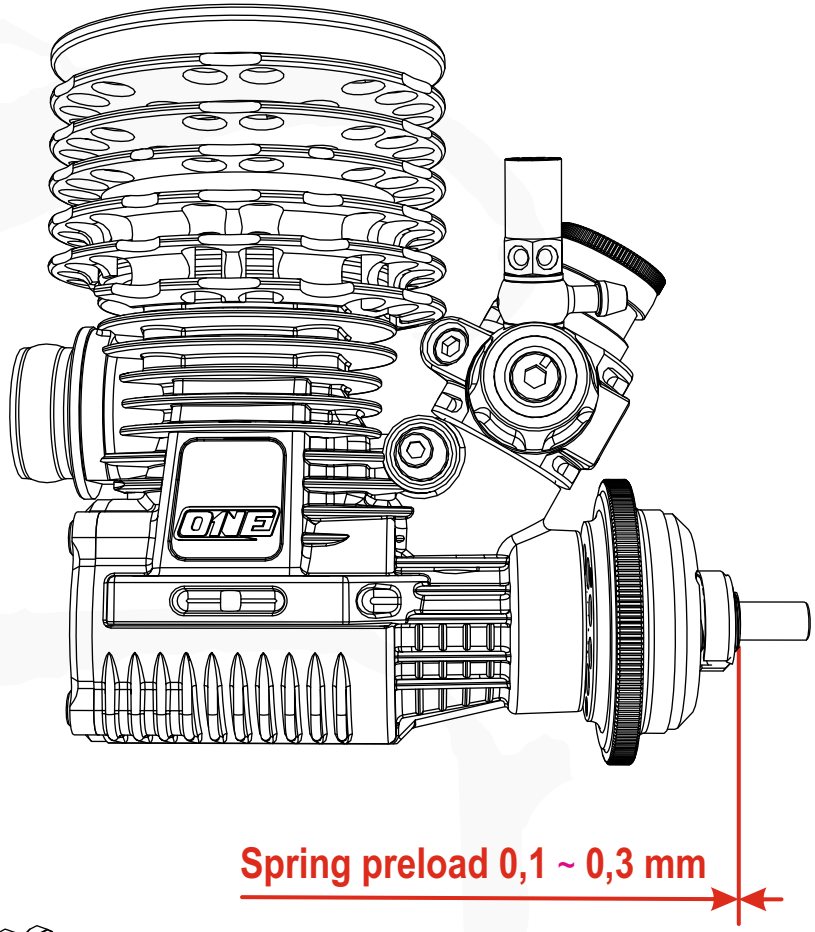

Spring preload 0,1 ~ 0,3 mm

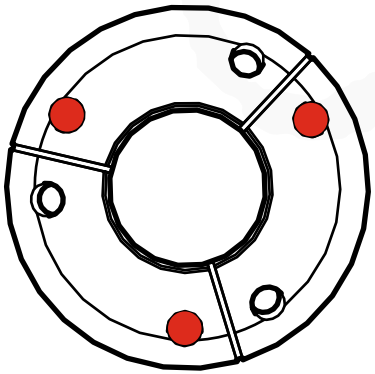

The shoe moves to anticlockwise direction on the axle

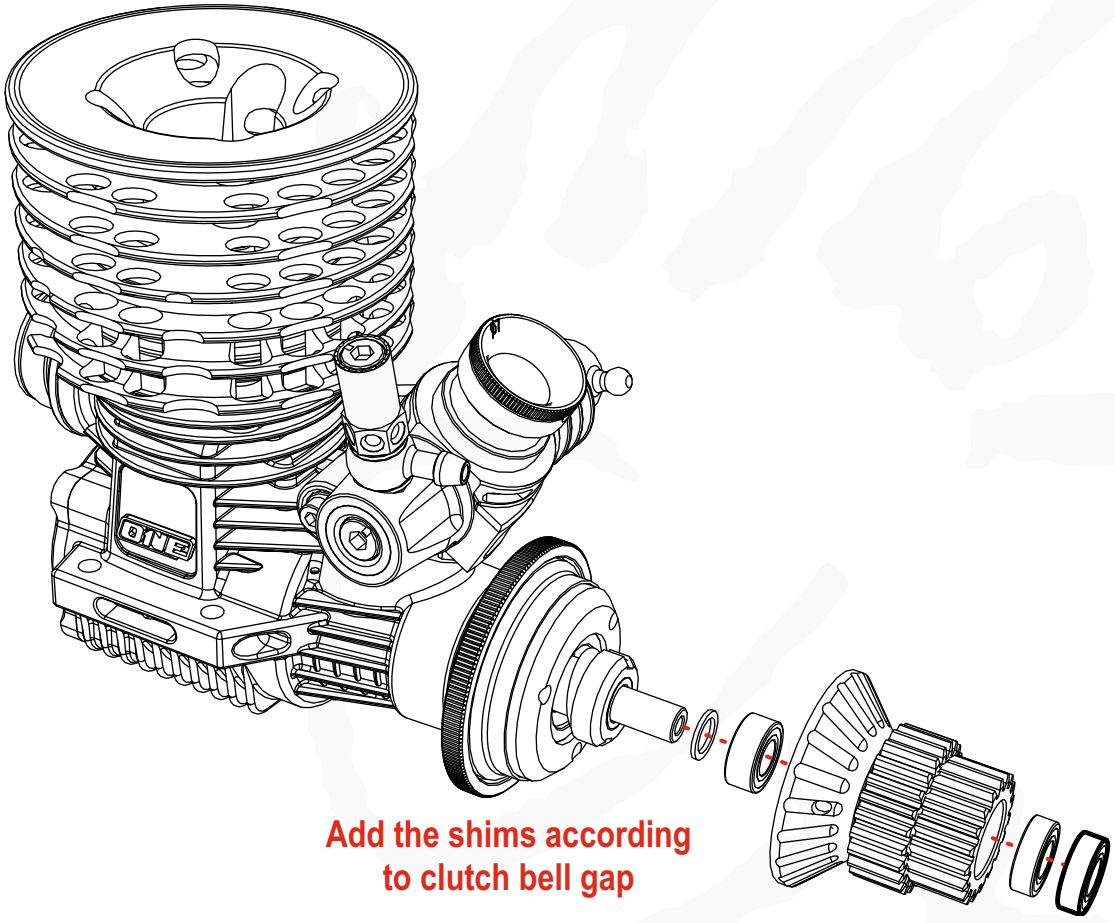

Add the shims according to clutch bell gap

Adjusting the clucth bell gap

Gap 0 mm

Do not install internal shims

Push the clutch bell on the clutch shoe and misure A distance

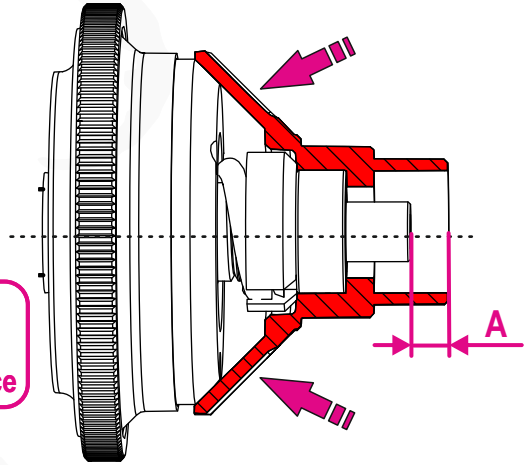

Gap 0,5 mm

Install internal shims appropriately

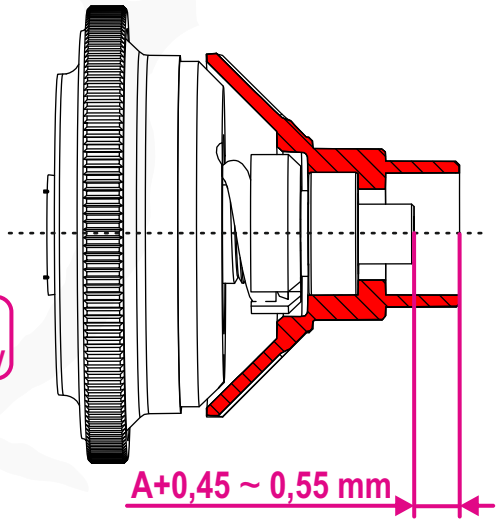

Clutch

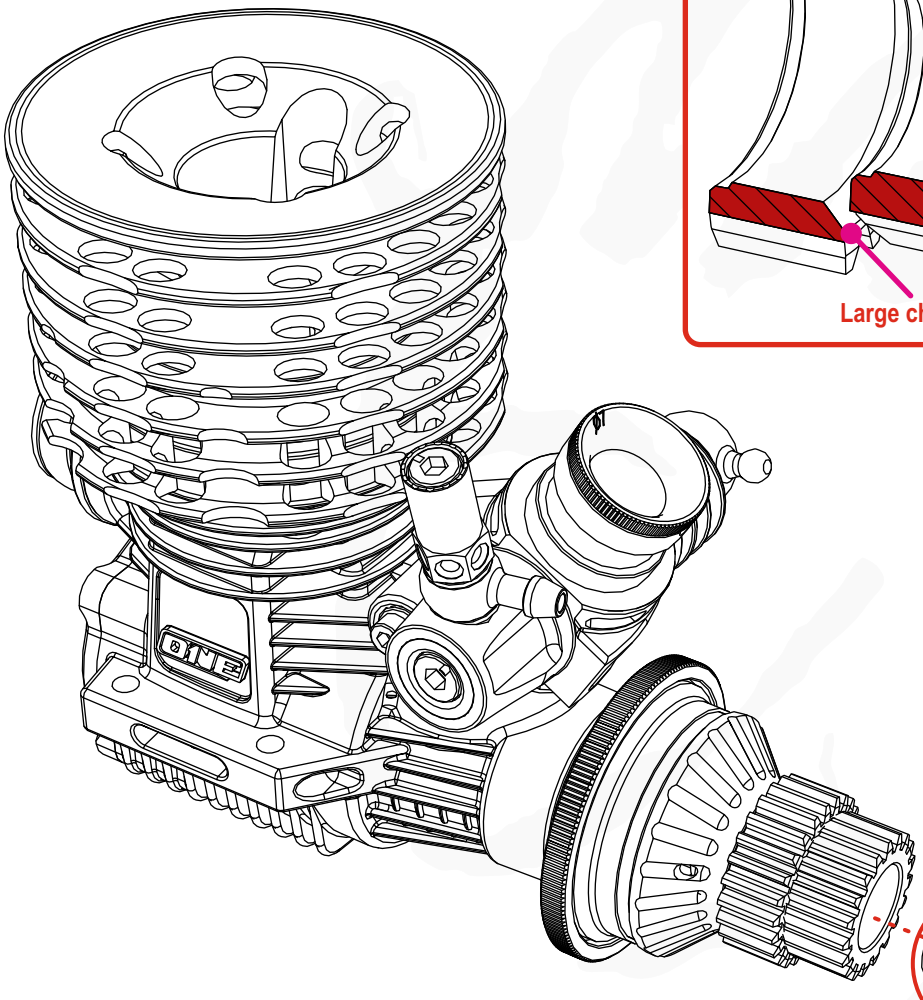

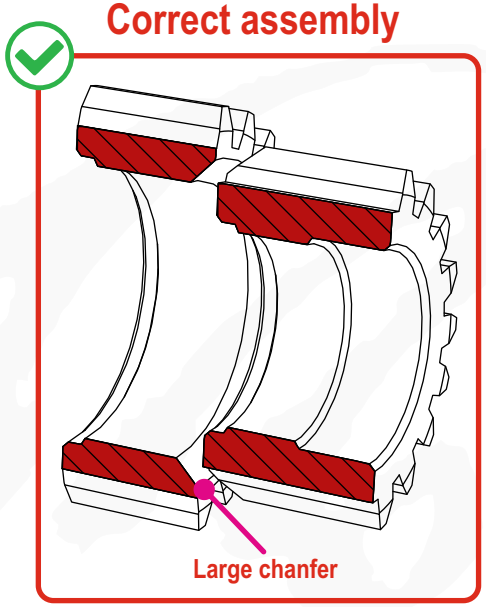
Correct assembly
Large chanfer

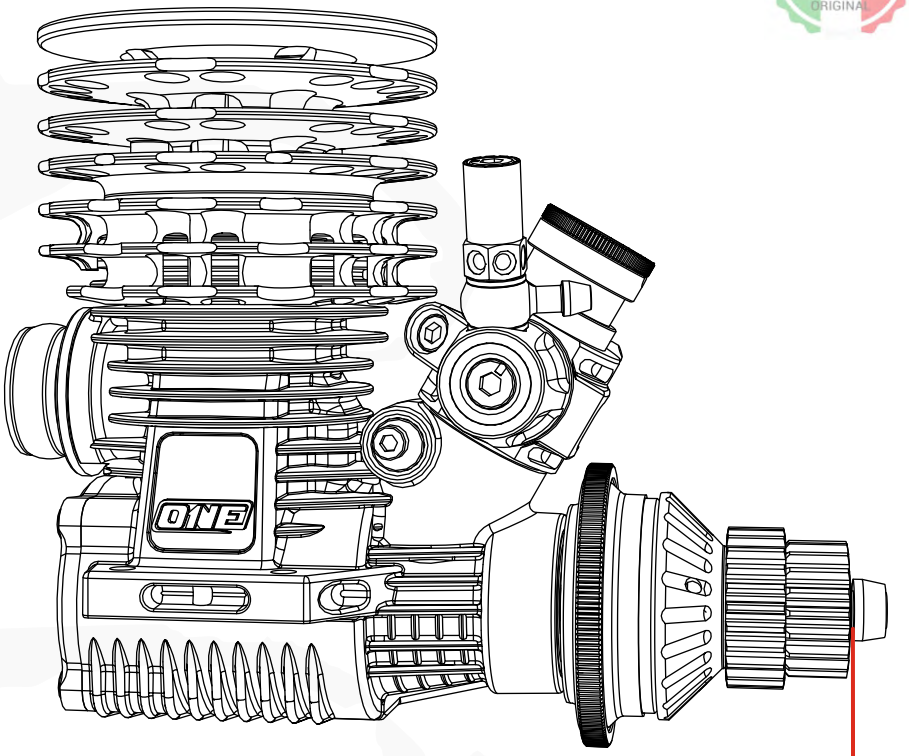
0,10 ~ 0,15 mm Endplay gap

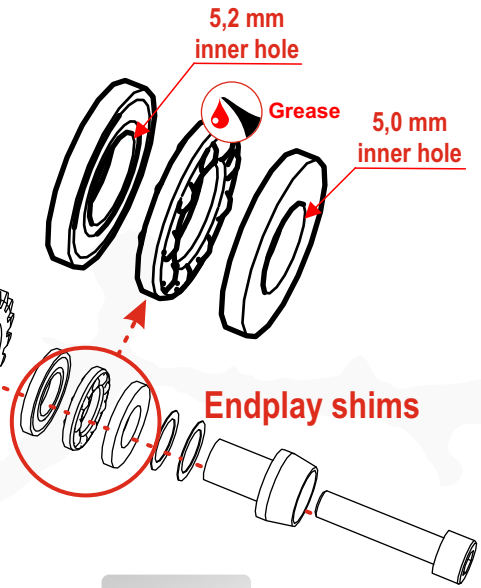
5,2 mm
inner hole
Grease
5,0 mm
inner hole
Endplay shims

BAG V - STEP 20.5

Clutch

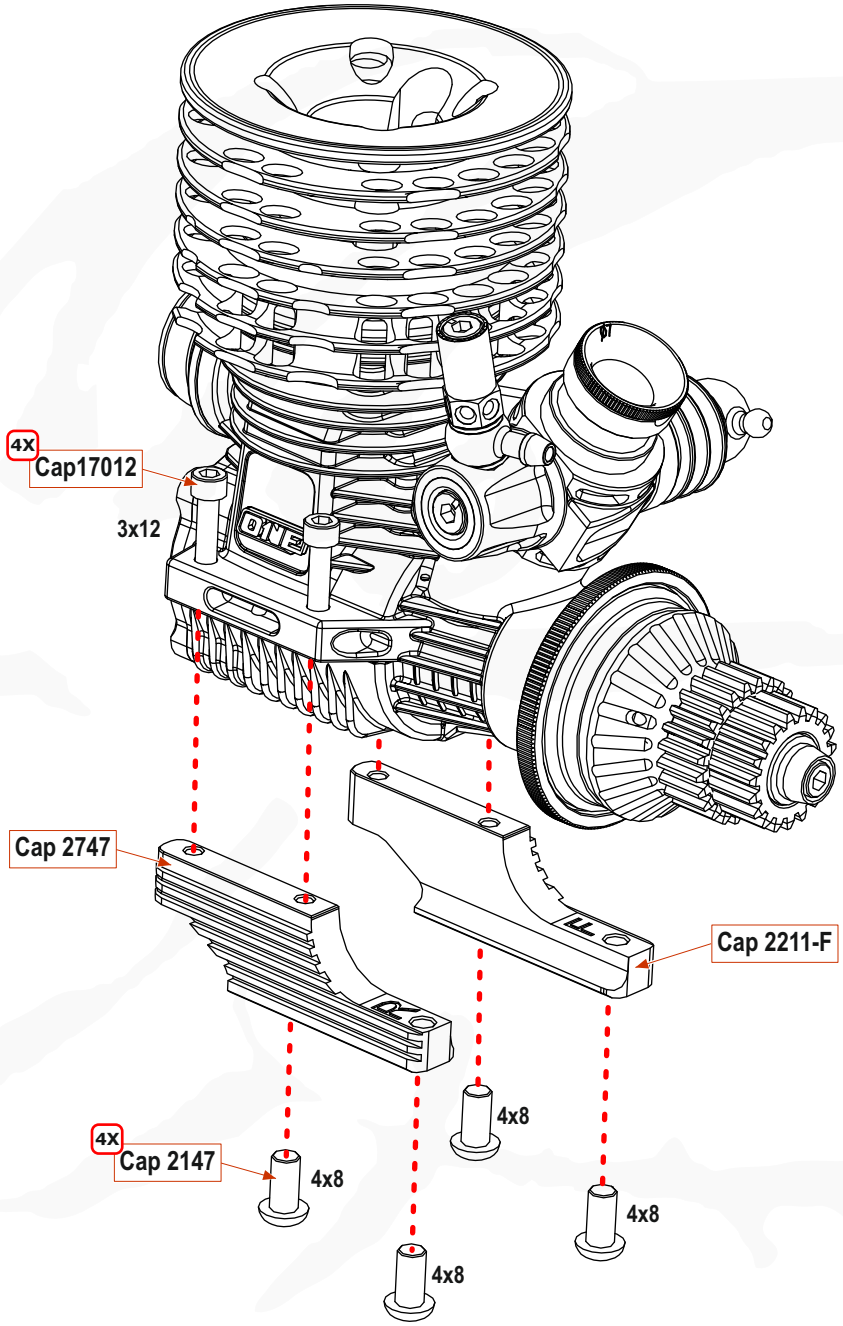

Clutch

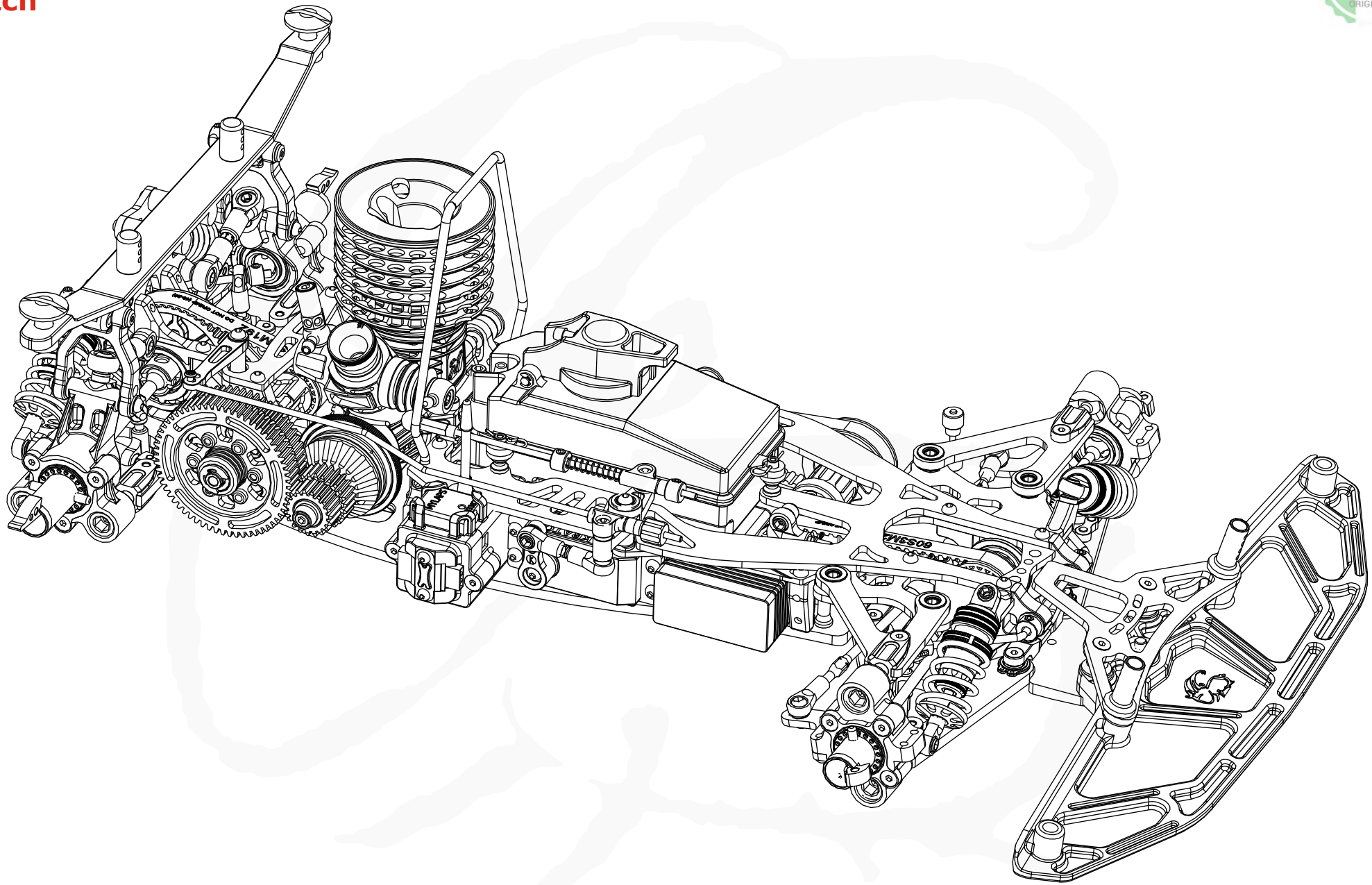

QUANTUM

SET-UP SHEET v1.0

Driver:	Temperature: (Air) (Asphalt)
Track:	Traction: Low ☐ Medium ☐ High ☐ Insane ☐
Event:	Asphalt condition: Smooth ☐ Mixed ☐ Bumpy ☐
Date:	Race result:

FR	FL	Tyres	RR	RL
		Manufacturer		
		Shore		
69 mm	69 mm	Diameter	76 mm	76 mm
		Tyre treatment		
		Rim treatment		

Front	Shocks	Rear
600 cst	Oil	600 cst
Blue/White	Spring	Green
3	Piston Hole	3
50	Rebound %	50

Front	Sway bars	Rear
2,3 mm	Ø	2,7 mm

Drive train		
Transmission	23/46T ☑	24/48T ☐
Middle pulley	29T ☐	30T ☑

Steering			
Ackerman insert	9 ☐	10 ☑	11 ☐ 12 ☐
Steering degrees	In		Out
Caster angle	7,5° ☐	11° ☑	14,5° ☐

Speed gear			
Pinion 1st	18T ☐	19T ☑	
Spur gear 1st	60T ☐	61T ☐	62T ☑
Pinion 2nd	23T ☐	24T ☑	
Spur gear 2nd	56T ☐	57T ☐	58T ☑

Front	Suspensions	Rear
R -2° L -2°	Camber	R -2,5° L -2,5°
+1°	Toe	-2,5°
250 mm	Track wide	260 mm
8 mm	Ride height Tyre Ø69/76	9 mm
1,5 mm	Downstop	7 mm

Engine	
Brand	
Manifold	
Glow plug	
Fuel	

Clutch	
Bell Gap	0,5 mm
Endplay Gap	0,15 mm
Spring	Ultra
Spring preload	0,2 mm

Body	
Brand	
Body position	
Body holder	Foward ☐ Backwards ☐
Wing type	
Wing position	
Reinforce type	

Rear arms		
Arms lenght	Short ☐	Long ☑

Note:

Front

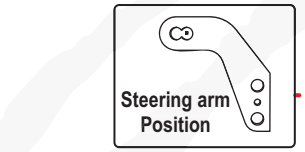

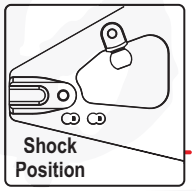

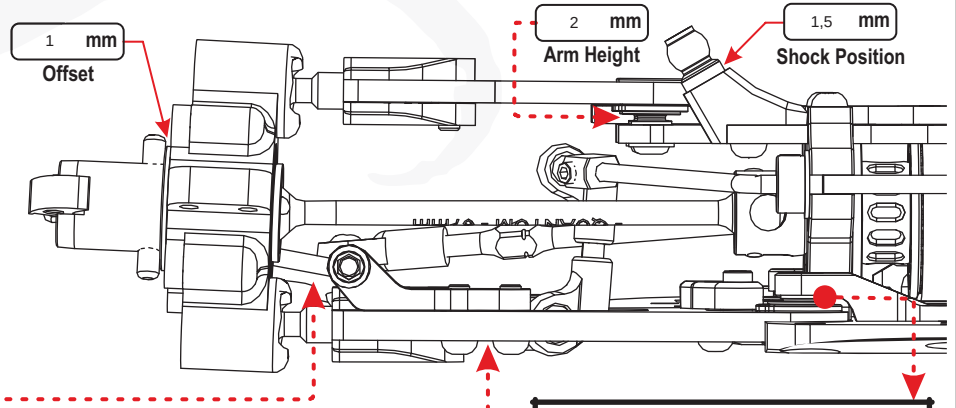

Arms Shims				
FF 0 mm	FR 0 mm	Front 1,5mm Max Rear 1mm Max	RF 0 mm	RR 0 mm

Rear

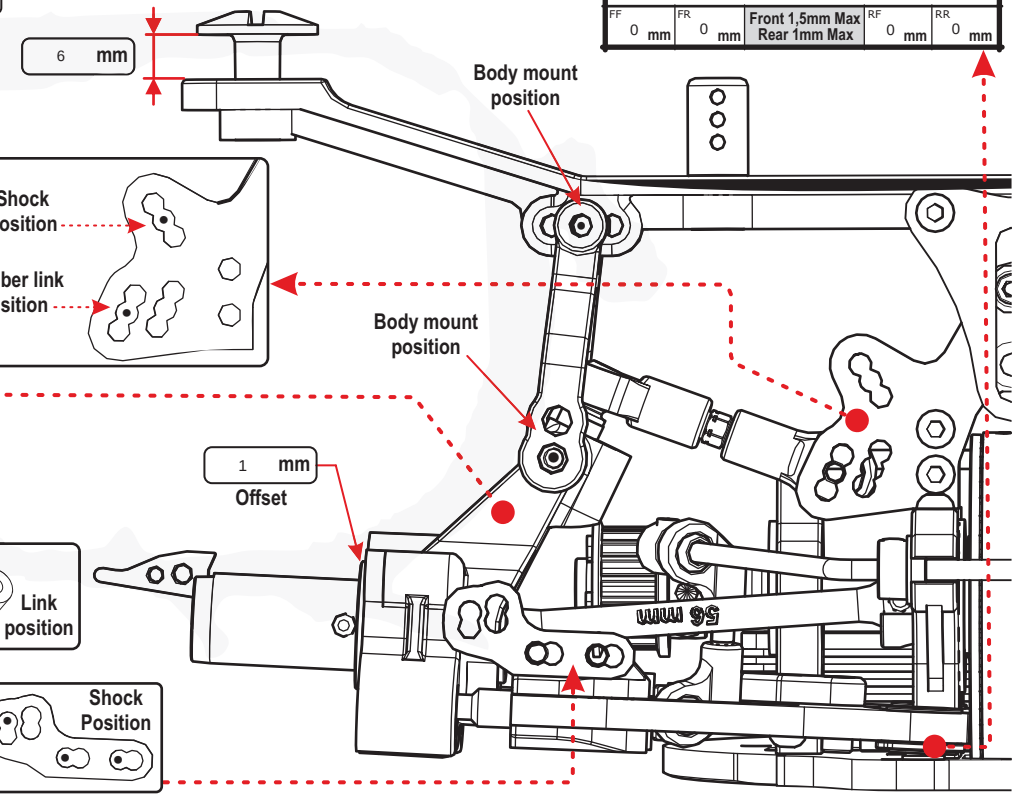

QUANTUM

SET-UP SHEET v1.0

Driver:	Temperature: (Air) (Asphalt)
Track:	Traction: Low ☐ Medium ☐ High ☐ Insane ☐
Event:	Asphalt condition: Smooth ☐ Mixed ☐ Bumpy ☐
Date:	Race result:

FR	FL	Tyres	RR	RL
		Manufacturer		
		Shore		
		Diameter		
		Tyre treatment		
		Rim treatment		

Front	Shocks	Rear
	Oil	
	Spring	
	Piston Hole	
	Rebound %	

Front	Sway bars	Rear
	Ø	

Drive train		
Transmission	23/46T ☐	24/48T ☐
Middle pulley	29T ☐	30T ☐

Steering			
Ackerman insert	9 ☐	10 ☐ 11 ☐	12 ☐
Steering degrees	In		Out
Caster angle	7,5° ☐	11° ☐	14,5° ☐

Speed gear			
Pinion 1st	18T ☐	19T ☐	
Spur gear 1st	60T ☐	61T ☐	62T ☐
Pinion 2nd	23T ☐	24T ☐	
Spur gear 2nd	56T ☐	57T ☐	58T ☐

Front Suspensions			Rear
R / L		Camber	R / L
		Toe	
mm		Track wide	mm
		Ride height Tyre Ø69/76	
		Downstop	

Engine	
Brand	
Manifold	
Glow plug	
Fuel	

Clutch	
Bell Gap	
Endplay Gap	
Spring	
Spring preload	

Body		
Brand		
Body position		
Body holder	Foward ☐	Backwards ☐
Wing type		
Wing position		
Reinforce type		

Rear arms		
Arms lenght	Short ☐	Long ☐

Note:

Front

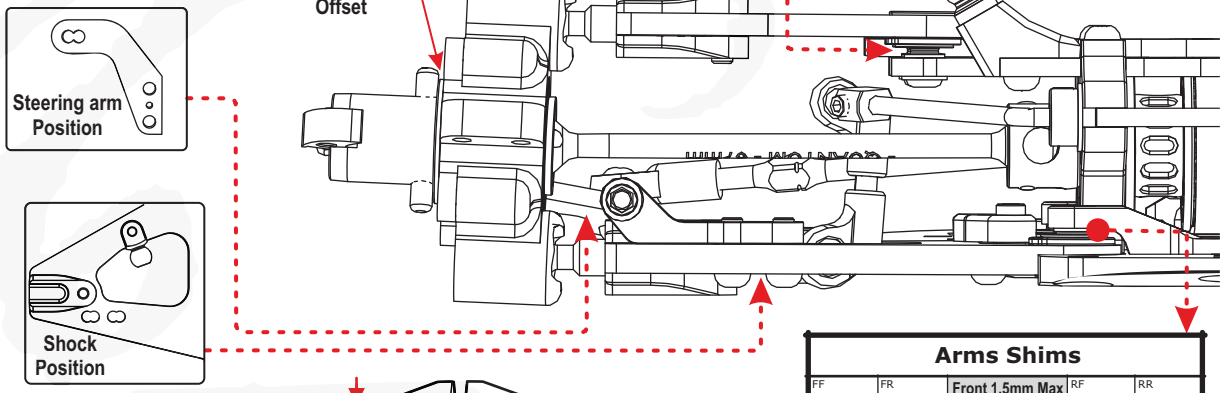

Arms Shims								
FF	mm	FR	mm	Front 1,5mm Max Rear 1mm Max	RF	mm	RR	mm

Rear

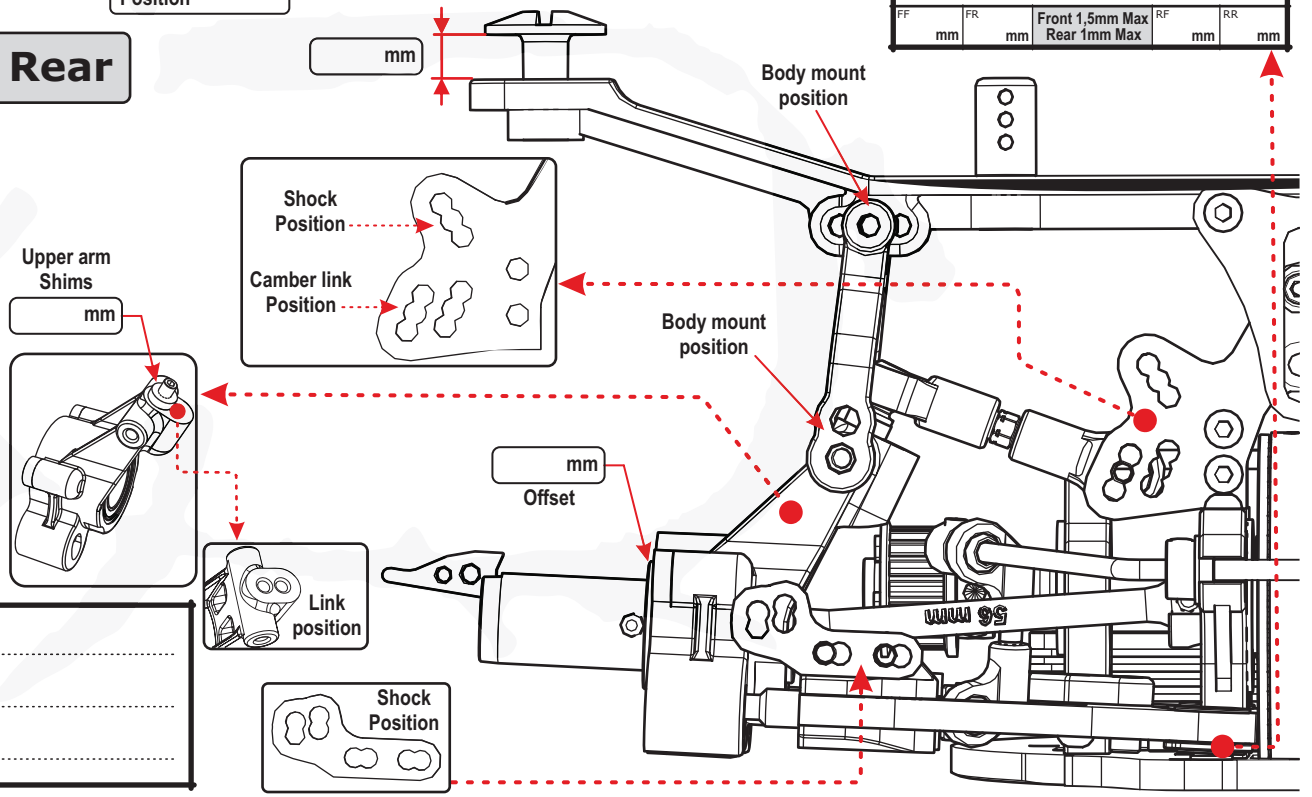


CAPRICORN
And now... Enjoy on track...